PRODUCT CATALOG

WASHROOM **ACCESSORIES**

BOBRICK

BUILDING VALUE SINCE 1906

PURPOSEFUL SOLUTIONS

The restroom can be a source of sustained value. With Bobrick, the right accessories can support your design vision and stand the test of time.

NEW B-820

Automatic Multi-Feed Soap Dispensing System

Serve up to six sinks at once.

Page 20

NEW B-2974

Surface-Mounted Automatic, Universal Roll Towel Dispenser

Timeless aesthetics, intuitive operation and robust engineering.

Page 13

NEW MAKE A BOLD STATEMENT WITH MATTE BLACK

Bobrick's Matte Black Collection will give your washrooms an ultramodern style and finish. High-end design. Labor-saving function. Sustainable operation. No matter what your design goal is, Bobrick's Matte Black accessories can help you deliver.

From Outside of the Cubicle to Inside the Cubicle, Bobrick has you covered.

From soap dispensers to toilet tissue dispensers, each item in the collection exudes sophistication while delivering exceptional performance. Explore the possiblities with our complete line at **bobrick.com**.

VIEW THE COLLECTION ONLINE

THE BOBRICK ADVANTAGE

THE PRODUCTS, SUPPORT & EXPERTISE YOU NEED

INDISPENSIBLE INSIGHT

Your Bobrick architectural representative is your source for indispensable restroom design and compliance expertise, as well as logistics support. **Find your region's representative at bobrick.com**.

ADA COMPLIANCE SUPPORT

Bobrick is proud to serve as an agnostic provider of accurate, up-to-date compliance information. Resources include the Planning Guide for Accessible Restrooms (PDF) guide and accredited AIA/HSW Continuing Education course.

AUTHENTICALLY SUSTAINABLE

Sustainable operation is closely associated with economical operation, providing design professionals with opportunities to support their clients' long-term business goals. **To learn more, register for our AIA/HSW Continuing Education course, "Designing Restrooms for Sustainable Operation."**

GLOBAL SPECIFICATIONS PROGRAM

Bobrick empowers its architectural representatives to assist architects specifying global projects through job-site support, international shipping, customs clearance and final installation. **Learn more at bobrick.com**.

A LEADER IN CUBICLES & PARTITIONS

Bobrick has expanded its selection to include a full line of both toilet partitions and cubicles. Explore traditional partition systems and options at **bobrick.com**. For a high-end design solution, explore PRIVADA® Cubicles at **privadacubicles.com** and Thrislington Cubicles at **thrislingtoncubicles.com**.

RESTROOM AMENITIES

2 ..... Design Integrated Accessory Series
4 ..... **Restroom Accessories**
6 ..... Combination Towel/Waste Units
10 ..... Paper Towel Dispensers
14 ..... Waste Receptacles
16 ..... Soap Dispensers
23 ..... Sanitary Napkin/Tampon Vendors
24 ..... Hand Dryers
26 ..... Mirrors
30 ..... **Toilet Compartment Accessories**
32 ..... Toilet Tissue Dispensers
34 ..... Cubicle Collection
35 ..... Seat Cover Dispensers
36 ..... Toilet Compartment Accessories
38 ..... Sanitary Napkin Disposals
40 ..... Grab Bars
42 ..... **Specialty Accessories**
44 ..... Bathroom Accessories
46 ..... Shower/Tub Accessories
47 ..... Hooks/Shelves/Custodial Accessories
49 ..... Healthcare Accessories
50 ..... Koala Kare Childcare Accessories
52 ..... **Why Bobrick?**

LEGEND

NEW Introduced since 2022

IMPROVED Operational improvement(s) or new feature(s)

Available in Satin Stainless or Matte Black

QuickShip: U.S. & Canada

QuickShip: U.S. only

ADA compliant

Sustainable operation by reducing waste and/or consumable usage

TowelMate® paper towel-saving accessory available

LinerMate® retainer accessory available

Cost Savings Calculator available at bobrick.com

Additional configurations available at bobrick.com

INDEX

Product.....Pages
204-1 46
204-2 46
251-4 40
366-60 8
367-60 8
368-60 8
*3944-152 8
3961-50 8
3974-350 8
B-1556 Series 28
B-164 Series 26
B-165 Series 27
B-166 Series 28
B-167 Series 26
B-168 Series 26
B-169 Series 26
B-2012 22
B-2013 22
B-207 46
B-2111 21
B-2112 21
B-221 35
B-221216 15
B-224 48
B-2250 15
B-239 48
B-254 39
B-262 12
B-2620 12
B-265 33
B-26627 22
B-270 38
*B-2706 23
B-279 14
B-2840 32
B-2860 13
B-2888 32
B-2890 33
B-2892 33
B-290 Series 27
B-292 Series 28
*B-293 29
B-294 29
B-297 44
B-2974 13
B-29744 13
B-301 35
B-3013 35
B-306 22
*B-3091 36
*B-30919 36
*B-3092 36
*B-30929 36
B-318 13
B-347 37
B-3474 37
B-34745 37
B-3479 37
B-35016 49
B-3513 39
B-35139 38
B-35303 39
B-354 39
B-35633 14
B-35639 14
B-357 37
B-3574 37
B-35745 37
B-3579 37
B-3588 32
B-35883 32
B-359 12
*B-35903 11
*B-359033 11
*B-359039 11
B-3644 14
B-369 9
B-36903 7
*B-3706 23
*B-37063 23
*B-3725 24
*B-3803 7
*B-38034 7
*B-380349 7
B-386 33
B-3888 32
*B-39003 7
B-3940 9
B-3942 9
B-3944 9
B-3961 8
B-3974 8
B-398 44
B-4063 21
B-4112 21
B-4207 45
B-4221 35
*B-4262 11
B-4288 32
B-4353 38
B-4354 38
*B-43644 14
*B-4369 6
B-4380 45
B-4388 32
*B-43944 6
*B-4706 23
*B-47064 23
*B-47069 23
B-4998 40
B-505 49
B-50517 49
B-517 46
B-518 46
B-5181 46
B-51815 46
B-5191 46
B-526 12
B-529 15
B-530 45
B-532 15
B-540 34
B-541 34
B-542 34
B-543 34
B-544 34
B-545 45
B-546 34
B-547 34
B-548 34
B-549 34
B-5806 Series 40
B-58616 Series 41
B-5898 41
*B-635 47
B-667 33
B-672 48
B-6727 48
B-673 45
B-674 44
B-676 44
B-6806 Series 40
B-6827 48
B-683 44
B-685 33
B-68616 Series 41
B-687 45
B-6898.99 41
B-7125 24
B-7128 25
B-7180 25
B-7188 25
B-750 25
B-7816 49
B-81212 20
B-820 20
B-820-248 20
B-820-258 20
B-822 19
*B-823 19
*B-824 17
B-82512 20
*B-828 17
*B-8281 17
B-830 20
B-8397 44
*B-840 18
*B-842 18
*B-845 18
*B-846 18
*B-848 18
*B-850 18
*B-852 18
*B-855 18
*B-856 18
*B-858 18
*B-8870 18
*B-8872 18
*B-8875 18
*B-8876 18
*B-8878 18
B-918116 Series 46
B-942 28
B-9881 49
B-9884 49
*KB300-00 51
*KB301-00 51
*KB300-SS 51
*KB310-SSRE 50
*KB310-SSWM 50
*KB311-SSRE 50
*KB311-SSWM 50
*TowelMate 6, 9

*Patented or patent pending. For patent information, please visit bobrick.com/patents.

For Additional Products, Tools & Documentation

For Technical Data Sheets, Guide Specifications, CAD Files, BIM Objects, Installation Instructions and more, visit Bobrick online at **bobrick.com**

DESIGN INTEGRATED ACCESSORY SERIES

To support harmonized, integrated design concepts, Bobrick offers three design integrated accessory series. Products within each series share signature design elements to enable a cohesive aesthetic and ease of specification.

ConturaSeries®

ConturaSeries accessories feature gentle 27° curvilinear design and consistent styling with flush tumbler locks. Choose from recessed and surface-mounted models. For towel and maintenance labor savings, ConturaSeries accessories are available with Bobrick's TowelMate and LinerMate accessories. Specify ConturaSeries for corporate headquarters, Class-A commercial buildings, civic icons and performing arts centers.

Monoform draws result in seamless design.

Rectangular design for Bauhaus architecture.

TrimLineSeries™

Designed for integration throughout the restroom, TrimLineSeries accessories achieve minimalistic design for clean, unadulterated lines with concealed flanges and flush locks on most models. Now with TowelMate for towel savings. Specify these accessories for contemporary environments, from prestige buildings and hospitality environments to healthcare and retail properties.

DESIGNER'S NOTE

TrimLineSeries and other accessories are available in **Matte Black powder-coated stainless steel** in a range for inside and outside of the cubicle. Ask your Bobrick representative for more information, including available products.

"Classic" beveled flange for installation ease.

ClassicSeries®

Ideal for budget-sensitive projects, ClassicSeries is the standard of value and offers the largest selection of models for all Type-304 restroom accessories. The series includes Bobrick's improved Automatic, Universal Roll Paper Towel Dispenser series, performance engineered with signal lights for ease of operation and maintenance. Specify ClassicSeries for standard-use buildings, including commercial offices, as well as institutional and industrial environments.

RESTROOM **ACCESSORIES**

B-290
Welded-Frame Mirror
Page 27

B-828
SureFlo Foam Automatic Counter-Mounted Soap Dispenser
Page 17

B-8878
Designer Series Polished Chrome Automatic Faucet
Page 18

B-43944
ConturaSeries Recessed Paper Towel Dispenser/ Waste Receptacle
Page 6

B-3725
TrimLineSeries ADA Recessed Hand Dryer
Page 24

Corporate Office
Products: B-290 Mirror, B-38031 Combination Unit, B-858 Soap Dispenser, B-8878 Faucet

Healthcare Facility
Products: B-370634C Napkin/Tampon Vendor, B-35745 Seat-Cover Dispenser, Sanitary Disposal and Toilet Tissue Dispenser,

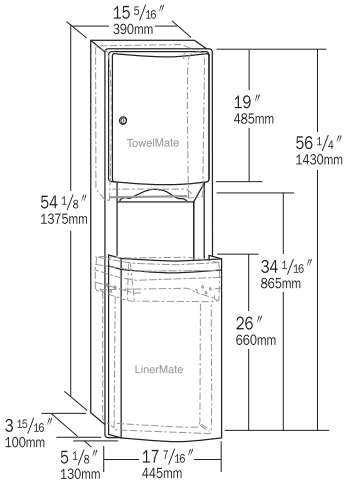

B-43944 ConturaSeries Recessed Paper Towel Dispenser/Waste Receptacle (Standard with TowelMate & LinerMate)

Satin-finish stainless steel. Flush tumbler lock. Dispenses 600 C-fold or 800 multi-fold towels. Removable front panel for easy cleaning. Receptacle has 15-gal capacity. Patented.

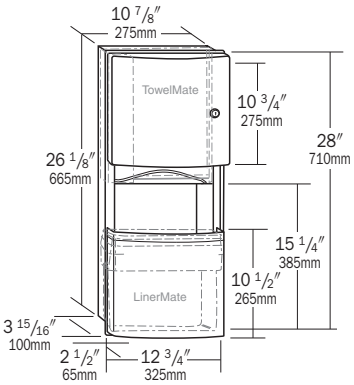

B-4369 ConturaSeries Recessed Paper Towel Dispenser/Waste Receptacle (Standard with TowelMate & LinerMate)

Satin-finish stainless steel. Flush tumbler lock. Dispenses 350 C-fold or 475 multi-fold towels. Waste receptacle has 3-gal capacity. Removable front panel for cleaning. Patented.

DESIGNER'S NOTE

B-43944, B-4369 and other ConturaSeries and TrimLineSeries accessories come standard with the TowelMate paper towel-saving accessory to help **reduce towel usage by up to 20%.** TowelMate dispenses one towel at a time, every time, and is also available as a standalone accessory to complement other Bobrick folded Paper Towel Dispensers.

ConturaSeries B-43944 Recessed Paper Towel Dispenser/ Waste Receptacle

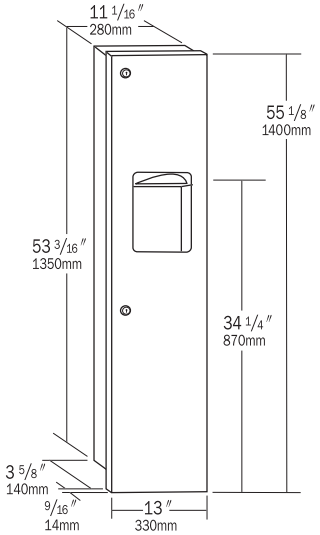

B-38034 TrimLineSeries Recessed Paper Towel Dispenser/Waste Receptacle

Satin-finish stainless steel. Built in TowelMate. Flush locks. Door has 90° return, conceals flange. Dispenses 600 C-fold, 800 multi-fold or 1100 single-fold towels. Removable, leak-proof, 3.8-gal waste container. Patented.

B-3803 Similar to B-38034, but with 6.3-gal waste container and requires 5 ⅝″ minimum depth. Patented.

B-380349 TrimLineSeries Surface-Mounted Paper Towel Dispenser/Waste Receptacle

Satin-finish stainless steel. Built in TowelMate. Flush locks. Door has 90° return, conceals flange. Dispenses 600 C-fold, 800 multi-fold or 1100 single-fold towels. Removable, leak-proof, 3.8-gal waste container. Skirt for surface-mounting. Patented.

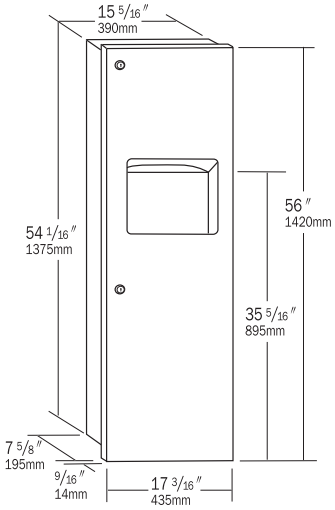

B-39003 TrimLineSeries Recessed Paper Towel Dispenser/Waste Receptacle

Satin-finish stainless steel. Built in TowelMate. Flush locks. Door has 90° return, conceals flange. Dispenses 600 C-fold, 800 multi-fold or 1100 single-fold towels. Removable, leak-proof, 12-gal waste container. Patented.

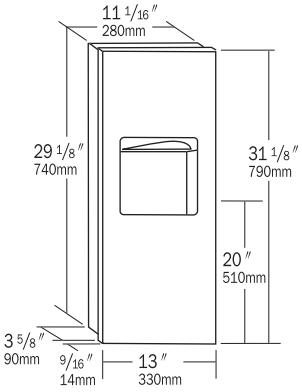

B-36903 TrimLineSeries Recessed Paper Towel Dispenser/Waste Receptacle

Satin-finish stainless steel. Built in TowelMate. Door has 90° return. Dispenses 300 C-fold or 400 multi-fold towels. Removable, leak-proof, 1.6-gal waste container. Patented.

Explore Bobrick's extensive range of Combination Towel/Waste Units at bobrick.com

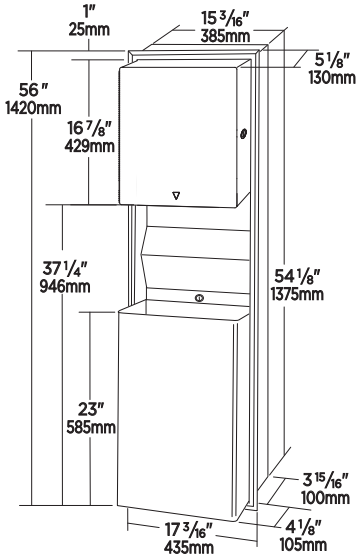

NEW

B-3974 ClassicSeries Recessed Convertible Automatic Roll Towel Dispenser/Waste Receptacle

Intuitive light clearly directs users to towel activation zone, eliminating hand waving. Convertible automatic universal, roll paper towel dispenser and removable 12-gal waste receptacle module. Satin-finish stainless steel. Seamless beveled flange. Waste receptacle is locked into cabinet. Requires 4 D-cell batteries (not included).

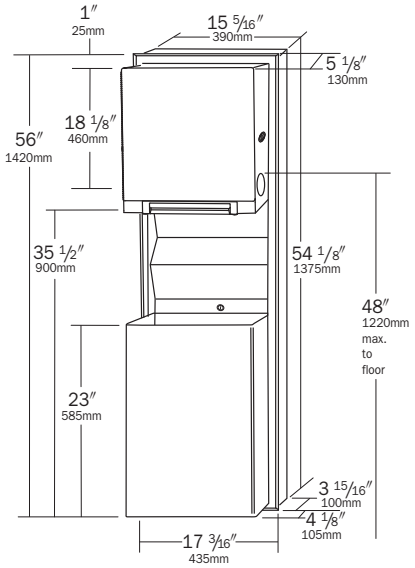

B-3961 ClassicSeries Recessed Convertible Roll Paper Towel Dispenser/Waste Receptacle

Unit includes convertible universal, roll paper towel module and removable 12-gal waste receptacle module. Satin-finish stainless steel. Seamless beveled flange. Touch-free, pull-towel mechanism dispenses 12″ length per pull. Accommodates 8″ wide, up to 8″ diameter rolls, 800 feet long, plus 3½″ diameter stub roll with automatic transfer. Waste receptacle is locked into cabinet.

Interchangeable Modules for ClassicSeries Combination Units

Modules convert from and to automatic and touch-free roll towels and folded towels.

Modules dispense universal, economically-priced products compared to proprietary contracts.

Conversions are made without replacing existing cabinets in the wall.

3944-152 folded towel dispenser module.

3961-50 touch-free, pull-towel dispenser module.

NEW 3974-350* automatic dispenser module. .

366-60 6-gal

367-60 12-gal

368-60 18-gal

DESIGNER'S NOTE

Restrooms may serve various patron and traffic types over their life cycles. Convertible cabinets enable switching between folded, mechanical roll and automatic roll towels without compromising design integrity, inconvenience or additional cost.

Interchangeable Receptacles:

Choose from 6- 12- and 18-gal waste receptacles. Fit **B-3944**, **B-3961**, **B-3974 Series**.

*Bobrick implemented a product design change in February 2023; the 3974-350 is only compatible with the newly designed version. See **bobrick.com** for more details.

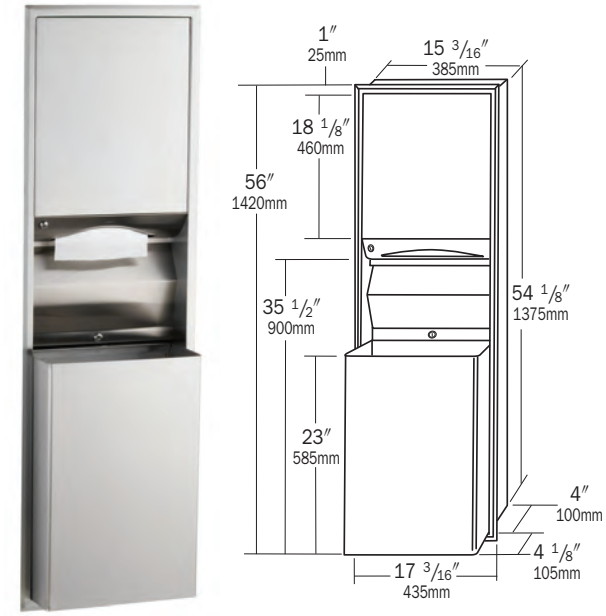

B-3944 ClassicSeries Recessed Convertible Paper Towel Dispenser/Waste Receptacle

Unit includes convertible paper towel module and 12-gal waste receptacle module. Satin-finish stainless steel. Seamless beveled flange. Dispenses 600 C-fold or 800 multi-fold towels. Removable waste receptacle locked into cabinet. Receptacle has 12-gal capacity.

Compatible with interchangeable modules. See page 8.

B-3940 Similar to B-3944, with 6-gal waste receptacle module.

B-3942 Similar to B-3944, but with skirt for semi-recessing in 2″ walls.

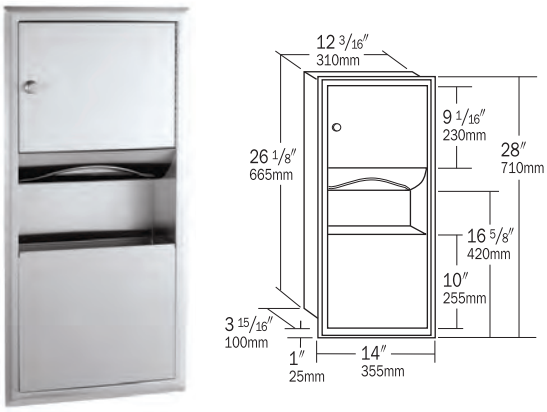

B-369 ClassicSeries Recessed Paper Towel Dispenser/Waste Receptacle

Satin-finish stainless steel. Seamless beveled flange. Dispenses 350 C-fold or 475 multi-fold towels. Knob-latch retains door. Removable waste container has 2-gal capacity.

Reduce Towel Usage by Up to 20%

TowelMate dispenses one towel at a time, every time, to reduce towel usage by up to 20%. When selecting folded towel dispensers, use the model number of your choice and add the appropriate TowelMate model number to complete your specification. Accessories can also be ordered for similar models of like description. Patented.

Part No.	Model No.
3803-130	B-3803*, B-38032*
369-130	B-35903*, B-36903*, B-359, B-369, B-3699
3944-130	B-38034*, B-380349* B-3942, B-3944, B-3947, B-3949
262-130	B-262, B-2620, B-2621, B-26212
39003-130	B-39003*

*Retrofittable parts for TrimLineSeries models manufactured before January 2021.

Explore Bobrick's extensive range of Combination Towel/Waste Units at bobrick.com

ROLL OR FOLD?

Roll Paper Towels

Folded Paper Towels

Benefits

- Less maintenance than folded paper towels in most buildings
- Automatic models feature adjustable towel lengths.
- Stub roll utilization feature provides complete consumable usage with less replacement time

Ideal Applications

- Buildings where reduced maintenance is important
- High-traffic facilities
- Projects with stringent operating budgets

Benefits

- When TowelMate is installed, units dispense one towel at a time, reducing consumption and waste
- Faster dispensing of towels
- Dispensers may be concealed, countertop mounted or have minimal wall protrusion

Ideal Applications

- Restrooms where low-profile design is desired, but recessed roll dispensers are not viable
- Prestige buildings with low-to-medium traffic where a minimalistic design theme is preferred

B-4262 ConturaSeries Surface-Mounted Paper Towel Dispenser with TowelMate

Satin-finish stainless steel. Tumbler lock on top of cabinet. Door swings down for loading towels. Dispenses 400 C-fold or 525 multi-fold towels. Cabinet slots indicate refill time. Unit 10 13/16″ W, 13 1/4″ H, 4 7/8″ D. Patented.

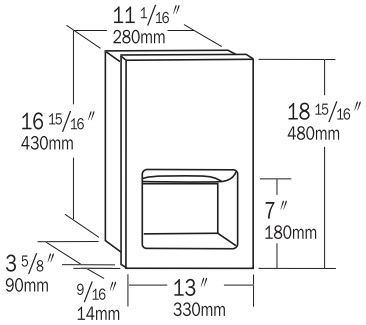

B-35903 TrimLineSeries Recessed Paper Towel Dispenser with TowelMate

Satin-finish stainless steel. Door has 90° return. Dispenses 300 C-fold or 400 multi-fold towels. Patented.

B-359039 TrimLineSeries

Surface-Mounted Paper Towel Dispenser with TowelMate

Satin-finish stainless steel. Flush lock. Dispenses 300 C-fold or 400 multi-fold towels. Door equipped with tumbler lock and full-length stainless steel piano hinge. Skirt is removable in the field for optional recessed mounting. Unit 12 13/16″ W, 17 15/16″ H, 4 1/2″ D. Patented.

B-359033 Similar to B-359039, but for recessed installation in 3 3/4″ walls. Patented.

DESIGNER'S NOTE

In a typical office building with 40 folded towel dispensers, TowelMates helped reduce usage by 21% for thousands of dollars in annual savings. **Visit bobrick.com for an interactive Cost Savings Calculator.**

Explore Bobrick's extensive range of Paper Towel Dispensers at bobrick.com.

B-526 TrimLineSeries Countertop-Mounted Paper Towel Dispenser

Satin-finish stainless steel. Flange has 90° return. Towels load into top of dispenser. Dispenses 300 C-fold or multi-fold towels. Unit 12 ¾″ W, 6″ front to back depth; 17″ minimum clearance below mounting surface is required. Housing below countertop to conceal dispenser is not included.

B-262 ClassicSeries Surface-Mounted Paper Towel Dispenser

Satin-finish stainless steel. Dispenses 400 C-fold or 525 multi-fold towels. Door has tumbler lock and piano-hinge. Hemmed towel tray opening. Unit 10 ¾″ W, 14″ H, 4″ D.

B-2620 Similar to B-262, but with knob-latch.

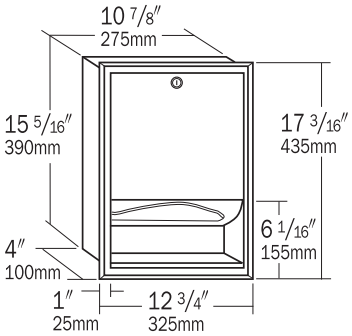

B-359 ClassicSeries Recessed Paper Towel Dispenser

Satin-finish stainless steel. Seamless beveled flange. Dispenses 350 C-fold or 475 multi-fold towels. Door equipped with full-length stainless steel piano-hinge at bottom; swings down for easy filling.

DESIGNER'S NOTE

From reduction of towel usage to elimination of plastic waste to multi-feed soap dispensing systems, the right accessories can enable long-term sustainability. **Learn more by visiting our Bobrick Green web page at bobrick.com/about-us/values/bobrick-green/**

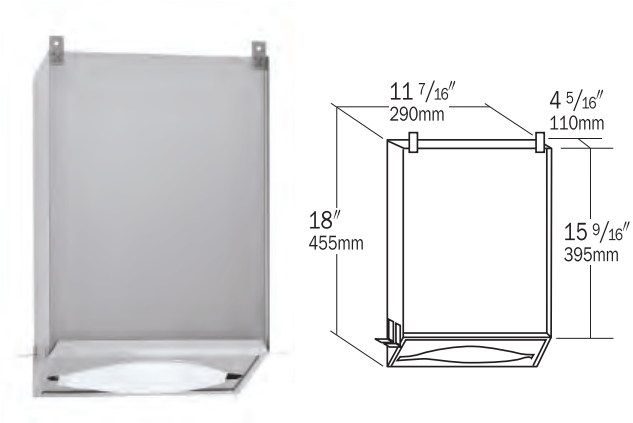

B-318 **Concealed Paper Towel Dispenser**

Satin-finish stainless steel. Dispenses 600 C-fold or 800 multi-fold towels. Towels load into bottom of cabinet concealed behind wall or mirror; only the towel tray is visible.

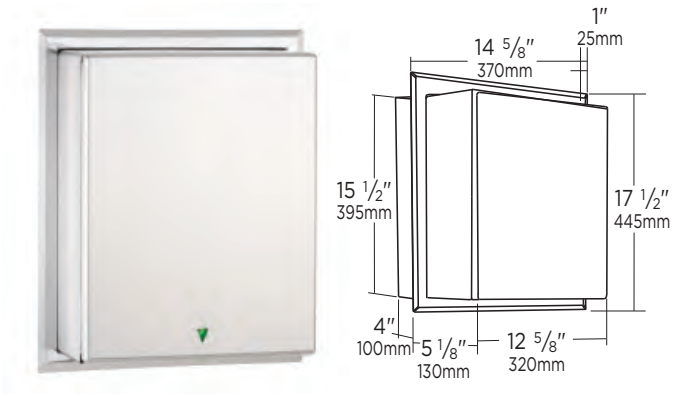

NEW

B-29744 **Automatic, Universal Semi-Recessed Roll Paper Towel Dispenser**

Intuitive, patron-friendly light clearly directs users to towel activation zone, eliminating hand waving.

NEW

B-2974 **Automatic, Universal Surface-Mounted Roll Paper Towel Dispenser**

Intuitive, patron-friendly light clearly directs users to towel activation zone, eliminating hand waving. Satin-finish stainless steel. Door has tumbler lock and piano-hinge. Unit 12 5/8″ W, 15 1/2″ H, 9 1/16″ D. Requires 4 D-cell batteries (not included).

B-2860 **Surface-Mounted Roll Paper Towel Dispenser**

Satin-finish stainless steel. Touch-free, pull-towel mechanism dispenses 12″ length per pull (1.8 lbs) of universal towels. Accommodates 8″ wide, up to 8″ diameter rolls, 800 feet long, plus 3 ½″ diameter stub roll with automatic transfer. Door has tumbler lock and piano-hinge. Unit 11 ¾″ W, 15″ H, 9″ D.

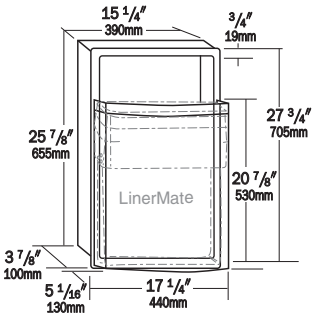

B-43644 ConturaSeries Recessed Waste Receptacle with LinerMate

Satin-finish stainless steel. Removable front panel for easy cleaning. Unit has 2.8-gal. capacity. Patented.

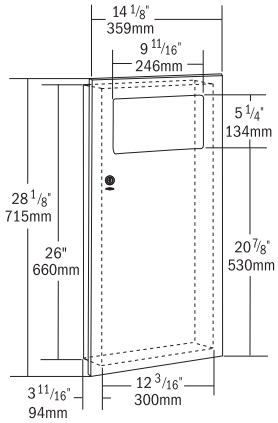

B-35633 TrimLineSeries Recessed Waste Receptacle with Disposal Door

Satin-finish stainless steel. Flush lock. Removable stainless steel waste container. Removable plastic waste container has 3-gal. capacity.

B-35639 Similar to B-35633, but surface-mounted.

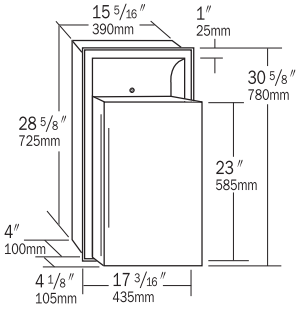

B-3644 ClassicSeries Recessed Waste Receptacle

Satin-finish stainless steel. Seamless beveled flange. Removable receptacle locks into cabinet. Unit has 12-gal. capacity.

Compatible with interchangeable modules. See page 8.

366-60 6-gal waste receptacle module.
368-60 18-gal waste receptacle module.

B-279 Surface-Mounted Waste Receptacle

Satin-finish stainless steel. Bottom edges hemmed for safety. Hooks hold furnished reusable vinyl liner; removable for servicing. Unit has 6.4-gal. capacity. Unit 14″ W, 18″ H, 6″ D.

B-529 **Countertop-Mounted Waste Chute**

Rolled flange and exposed surfaces are bright-polished stainless steel. Outside diameter 6 15⁄16″, inside diameter 5 ½″, chute depth 5″. Provides access to under-counter waste receptacle (not included).

B-532 Similar to B-529, but with flat flange and exposed satin-finish stainless steel surfaces. Outside diameter 6 3⁄16″, inside diameter 5 3⁄16″, chute depth 3 ⅞″.

B-221216 **Foot-Operated Waste Receptacle**

Satin-finish stainless steel with pedal for foot operation. Integrated liner clamp. Unit has 12-gal. capacity. Unit 13 3⁄16″ W, 23 ½″ H, 14″ D.

B-2250 **Floor-Standing Waste Receptacle with Top**

Satin-finish stainless steel. Top with self-closing doors. Vinyl wall bumper, rubber feet. Liner hooks. Unit has 13-gal. capacity. Unit 13 ⅜″ W, 13 ⅜″ D at top, 29 ½″ H.

Explore Bobrick's extensive range of Waste Receptacles at bobrick.com.

AUTOMATIC OR MANUAL?

Although the no-touch restroom is quickly becoming industry standard, automatic soap dispensers are not a universal solution. Some projects may benefit from manual operation.

Automatic Operation

Manual Operation

Benefits

- Enhances hygiene, reduces cross-contamination
- Controls soap usage with portion control
- Creates a seamless, modern experience

Ideal Applications

- Prestige or high-end buildings
- Low to medium traffic facilities
- Washrooms with other touch-free accessories, especially faucets

Benefits

- No batteries or power source required
- More mounting options

Ideal Applications

- Buildings with limited janitorial staff or resources
- High-traffic facilities
- Projects with stringent capital budgets

B-828 & B-8281 B-824, SUREFLO®

FOAM or LIQUID AUTOMATIC SOAP DISPENSER

Patented.

Features & Benefits

- **Labor Savings:** Top filling saves labor; oversized fill port designed for economical bulk jug soap. No more under-counter servicing of screw-on cartridges.
- **Soap Savings:** Foam or Liquid bulk jug soap saves more than 80% compared to proprietary cartridges at locked-in prices; SureFlo ROI averages one year.
- **Design Continuity:** Polished chrome finish reflects design continuity with other restroom accessories compared to the plastic retrofit hodgepodge.
- **Reliable Operation:** Electronic activation system defines the "dispense zone," eliminating hand waving and false dispensing. Adjustable portion control.
- **Responsible:** Five 800ml soap cartridges hold approximately the same amount as a one-gal. bulk jug, resulting in a 57% reduction of post-consumer waste.

B-828 or B-8281 SureFlo Foam

Automatic, Counter-Mounted Soap Dispensers

B-824 SureFlo Liquid Automatic, Counter-Mounted Soap Dispenser

How Much Will You Save?

Estimates based on one dispenser, comparing bulk-fill SureFlo to under-counter proprietary cartridges.*

- Cartridge soap approximate annual cost **$223.24**
- Annual soap savings **82%**
- Post-consumer waste reduction **57%**

There are additional labor-saving factors such as top-filling compared to frequent under-counter cartridge changeovers. Plus, the time consuming convenience of bulk jug soap.

*Based on 35 people per sink at 4 hand washes per day, equating to 112ml of soap per day or 29.5L per year per sink. Bulk soap approximate annual cost $41.01.

DESIGNER'S NOTE

SureFlo dispensers can be powered through an AC Adapter, supporting sustainable, economical operation. It requires no batteries, which ultimately end up in landfills.

Explore Bobrick's extensive range of Soap Dispensers at bobrick.com.

DESIGNER SERIES SOAP DISPENSERS & FAUCETS

DURABLE CONSTRUCTION. ELEGANT DESIGN.

Patented.

Designer Series **Automatic, Counter-Mounted Foam or Liquid Soap Dispensers & Faucets**

Bobrick's Designer Series Automatic Soap Dispensers feature durable construction and designer finishes. All the benefits of the SureFlo B-824, but with the added durability of die-cast zinc body construction. Available in five designer finishes; available with an automatic faucet in a matching finish.

B-848 Polished Chrome, Foam
B-858 Polished Chrome, Liquid
Matching Faucet: B-8878

B-846 Polished Nickel, Foam
B-856 Polished Nickel, Liquid
Matching Faucet: B-8876

B-840 Polished Brass, Foam
B-850 Polished Brass, Liquid
Matching Faucet: B-8870

B-845 Brushed Nickel, Foam
B-855 Brushed Nickel, Liquid
Matching Faucet: B-8875

B-842 Matte Black, Foam
B-852 Matte Black, Liquid
Matching Faucet: B-8872

Automatic Faucet

Provide aesthetic integrity. Adjustable time-out durations, line purging, adaptable sensor range, LEED flow-rate options.

3974-57 AC Adapter comes standard with each dispenser.
824-201 Optional AC Multi-Adapter kit available.

Polished Chrome, Polished Nickel and Brushed Nickel are available on a standard order basis. Polished Brass and Matte Black have minimum quantity requirements and longer lead times. Please contact customer service for more information.

Designers Note:
New installation – Ensure mounting hole is 1-3/8" (35mm) in diameter. Refer to installation instruction with mounting template.

Existing/Retrofit - Ensure mounting hole is 1-3/8" (35mm) in diameter, if necessary, enlarge opening using appropriate hole saw. Refer to installation instruction with mounting template.

B-823 & B-822 MANUAL SOAP DISPENSERS

ENABLE SIGNIFICANT SOAP & LABOR SAVINGS

Features & Benefits

- **Labor Savings:** Top-fill convenience facilitates ease of maintenance. Saves 25% labor costs with no more bending under the counter to change cartridges.
- **Cost Savings:** Non-proprietary dispenser delivers substantial savings versus proprietary cartridges.
- **Sustainable:** Reduces post-consumer waste by 57%.
- **Design Continuity:** Chrome finish for fixture and accessory integration.
- **Secure:** Vandal-resistant locking cover and spout.

B-823

B-822

B-823 Series Manual Foam Soap Dispensers

Features ease of maintenance and labor savings. Vandal-resistant locking cover; corrosion-resistant, bright-polished spout, cover and escutcheon; high-impact-resistant ABS body and shank; shatter-resistant polyethylene container.

Model No.	Capacity (fl. oz.)	Spout Length	Max. Mounting Thickness
B-823	34	4″	3″
B-8231	20	4″	3″
B-8236	34	6″	3″
B-82316	20	6″	3″

Patented.

B-822 Series Manual Liquid Soap Dispensers

Features ease of maintenance and labor savings. Vandal-resistant locking cover and free-turning spout; corrosion-resistant, bright-polished spout, cover and escutcheon; high-impact-resistant ABS body and shank; shatter-resistant polyethylene container.

Model No.	Capacity (fl. oz.)	Spout Length	Max. Mounting Thickness
B-822	34	4″	4″
B-8221	20	4″	1″
B-8226	34	6″	4″
B-82216	20	6″	1″

Explore Bobrick's extensive range of Soap Dispensers at bobrick.com.

MULTI-FEED SOAP DISPENSING SYSTEMS

SERVICE MULTIPLE DISPENSERS FROM SINGLE SOURCE

NEW

Automatic Liquid & Foam Soap Systems

B-820 Six liter top-fill reservoir feeds up to six B-820-248 foam or B-820-258 liquid dispensers

Features & Benefits

- **Engineered for Busy Restrooms:** Designed for heavy traffic restrooms. Serves up to 6 sinks with automatic soap dispensers.
- **Hygienic:** Automatic dispensing for touchless hand washing.
- **Easy Maintenance:** Counter-mounted 6-liter reservoir for convenient top filling.
- **Cost-Saving:** Uses bulk soap for significant cost savings of 80% or more over proprietary cartridges.

SureFlo® Soap Dispensing System Compatible with Liquid & Foam Soap Dispensers

One B-830 cabinet per restroom services up to five B-822 or B-823 soap dispensers.

Features & Benefits

- **Engineered for Busy Restrooms:** Designed for medium to heavy traffic restrooms. Serves up to 5 sinks with manual soap dispensers.
- **Sustainable:** 30% post-consumer waste reduction.
- **Easy Maintenance:** 13,000 liquid soap handwashes or 25,000 foam handwashes per single cartridge.
- **Durable Construction:** Under-counter cabinet Type-304 satin-finish stainless steel.

Foam System Cartridge

B-82512
12-liter Cartridge of Green Foam Soap

Liquid System Cartridge

B-81212
12-liter Cartridge Pink Lotion Soap

B-4112 ConturaSeries Surface-Mounted Soap Dispenser

Corrosion-resistant valve dispenses commercially marketed all-purpose hand soaps. Container is satin-finish stainless steel. Capacity: 40-fl oz. Soap refill window. Concealed wall fastening. Hinged filler-top requires special key to open. Vandal-resistant. Unit 7″ W, 6 ⅛″ H; wall to push-button, 3 5⁄16″.

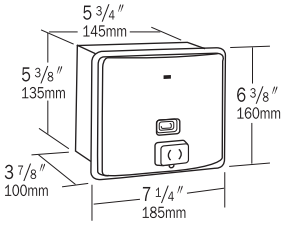

B-4063 ConturaSeries Recessed Soap Dispenser

Dispenses all-purpose soaps. Drawn, 20-gauge, one-piece front, satin-finish stainless steel with vessel attached to back. Capacity: 50-fl oz. Pulls out for filling. Concealed locking device.

B-2111 ClassicSeries Surface-Mounted Soap Dispenser

Vertical tank is satin-finish stainless steel. Valve dispenses all-purpose hand soaps. Capacity: 40-fl oz. Soap refill window. Concealed wall fastening. Hinged filler-top requires special key to open. Vandal-resistant. Unit 4 ¾″ W, 8 ⅛″ H; wall to push-button, 3 ½″.

B-2112 ClassicSeries Surface-Mounted Soap Dispenser

Horizontal tank is satin-finish stainless steel. Valve dispenses all-purpose hand soaps. Capacity: 40-fl oz. Soap refill window. Concealed wall fastening. Hinged filler-top requires special key to open. Vandal resistant. Unit 8 ⅛″ W, 4 ¾″ H; wall to push-button, 3 ½″.

Explore Bobrick's extensive range of Soap Dispensers at bobrick.com.

B-2013 Automatic Wall-Mounted Foam Soap Dispenser

Satin-finish stainless steel. Corrosion-resistant valve dispenses a variety of foaming soaps. Sensor-activated valve. Soap refill-indicator window. Lockable housing is hinged for refilling and maintenance. Capacity: 27-fl oz. CE Certified. Unit 4 ¼″ W, 9 ⁹⁄₁₆″ H, 4 ⁷⁄₃₂″ D.

B-2012 Automatic Wall-Mounted Liquid Soap Dispenser

Satin-finish stainless steel. Corrosion-resistant valve dispenses a variety of liquid soaps and hand sanitizers. Sensor-activated valve. Soap refill-indicator window. Lockable housing is hinged for refilling and maintenance. Capacity: 30-fl oz. (850 ml). CE Certified. Unit 4 ³⁄₁₆″ W, 9 ⁹⁄₁₆″ H, 4 ⁷⁄₃₂″ D.

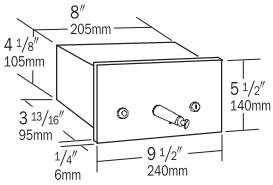

B-306 TrimLineSeries Recessed Soap Dispenser

Satin-finish stainless steel. Door has 90° return, conceals flange. Door swings open for filling vessel on back. Hinge and tumbler lock secure door to cabinet. Capacity: 45-fl oz. Valve dispenses all-purpose soaps. Soap refill window.

B-26627 TrimLineSeries Surface-Mounted Foam Soap Dispenser

Satin-finish stainless steel. Accepts foam soap cartridges or bulk-fill soaps. Push activated with less than 5 lbs of force. Capacity: 17-fl oz. Concealed wall fastening. Hinged housing with key lock and soap refill window. Vandal-resistant. Unit 3 ¾″ W, 11 ¾″ H, 6″ D.

Explore Bobrick's extensive range of Soap Dispensers at bobrick.com.

SANITARY NAPKIN/TAMPON VENDORS

THE INDUSTRY'S LARGEST SELECTION

Bobrick offers the only fully ADA-compliant napkin/tampon vendors on the market, as well as a range of payment options to satisfy evolving expectations and legislation concerning access to free feminine hygiene products. **Are there laws in your area? Find out at bobrick.com/freevend**.

Patented.

Features & Benefits

- **Streamlined Maintenance:** Easy refilling; larger capacity can accommodate 30 tampons, 20 napkins.
- **Secure:** Two tumbler door locks keyed like other Bobrick accessories. Separately-keyed coin box lock for management access.
- **Green:** No battery or electricity required. Fabricated from 50–70% recycled stainless steel. Contributes to LEED credits.
- **Flexible:** Free, token and 25-cent vend conversion kits are available.

DESIGNER'S NOTE

Only Bobrick offers indisputably ADA compliant sanitary napkin/tampon vendors. They operate easily with less than 5 lbs force, without tight grasping, pinching or twisting of the wrist; recessed and semi-recessed models also satisfy the ADA 4″ protruding objects requirement.

Coin Operation Options

For no-charge operation, add C to model number (e.g., B-4706C). For Token operation, add T to model number. For 25¢, add 25 to model number (e.g., B-4706 25). Easy coinage conversion in the field.

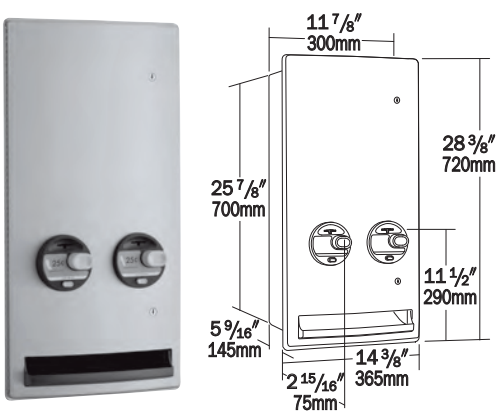

ConturaSeries

B-4706 Recessed

B-47064 Semi-Recessed

B-47069 Surface-Mounted

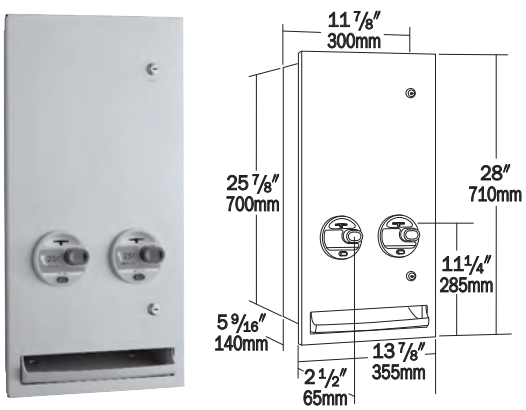

TrimLineSeries

B-37063 Recessed

B-370634 Semi-Recessed

ClassicSeries

B-2706 Surface-Mounted

B-3706 Recessed or Semi-Recessed

Explore Bobrick's extensive range of Sanitary Napkin/Tampon Vendors at bobrick.com.

HAND DRYER INNOVATIONS

LOW-WATTAGE & LOW-PROFILE OPTIONS

B-3725 TrimLineSeries

ADA Recessed Hand Dryer

Type-304 satin-finish, stainless steel recessed hand dryer with an extra deep alcove and low-profile contemporary design. Dryer operates at a mere 70 dBA and sustainable 1000 Watts of power. 115V AC, 8.5 Amp, 50/60 Hz, 1000 Watts, Single Phase, cULus Listed, or 208-240V AC, 4.0-4.4 Amp, 50/60 Hz, 1000 Watts, Single Phase, cULus Listed and CE marked. Patented.

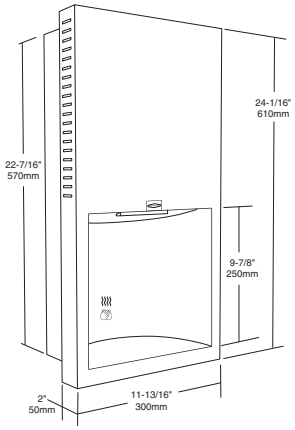

B-7125 InstaDry Hand Dryer

Surface-Mounted Automatic Hand Dryer

Contemporary design, ADA compliant satin-finish, stainless steel high-speed hand dryer. Delivers a less than 12-second dry time. Dryer is universal, 110V– 240V AC, 0.88-1.76 Amp, 50/60 Hz, 200 Watts, Single Phase, cULus Listed and CE marked.

DESIGNER'S NOTE

While the highly sustainable InstaDry hand dryer is ideal for high-traffic applications, such as transportation centers and stadiums, the Recessed Hand Dryer may be more appropriate for prestige facilities where design and noise are priorities.

B-7188 TerraDry™ ADA Surface-Mounted Hand Dryer

Bright-polished chrome-plated cast aluminum cover. Operates at a mere 70 dBA. Slim 100mm depth is compliant with accessibility standards. 115V AC, 8.5 Amp, 50/60 Hz, 1000 Watts, Single Phase, cULus Listed. 208-240V AC, 4.0-4.4 Amp, 50/60 Hz, 1000 Watts, Single Phase, cULus Listed and CE marked.

B-7180 TerraDry™ ADA Surface-Mounted Hand Dryer

White, high-gloss epoxy finish cast aluminum cover. Operates at a mere 70 dBA. Slim 100mm depth is compliant with accessibility standards. 115V AC, 8.5 Amp, 50/60 Hz, 1000 Watts, Single Phase, cULus Listed. 208-240V AC, 4.0-4.4 Amp, 50/60 Hz, 1000 Watts, Single Phase, cULus Listed and CE marked.

B-7128 TrimDry™ ADA Surface-Mounted Hand Dryer

Durable, 22-gauge Type-304 satin-finish stainless steel cover with black plastic trim. Automatic operation at 72 dBA with dual air outlets. 115V AC, 15 Amp, 1725 Watts, 50/60 Hz, cULus Listed, or 208–240V AC, 6.8–7.8 Amp, 1400–1900 Watts, 50/60 Hz, cULus Listed, VDE approved and CE marked.

B-750 AirCraft® ADA Recessed Hand Dryer

Durable, cast-iron with white vitreous enamel finish, automatic sensor, 115V AC, 20 Amp, 2300 Watts, 50/60 Hz, cULus Listed, or 208-240V AC, 9-10 Amp, 1900-2400 Watts, 50/60 Hz, cULus Listed, VDE approved and CE marked.

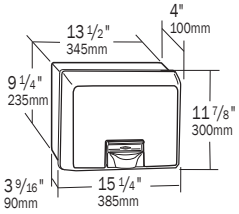

Sound Level Comparison of Bobrick's QuietDry™ Series with Brands X and D:

Brand	Bobrick QuietDry Series	Brand X	Brand D
Measured in Decibels (dBA)*	72 dBA	83 dBA	85 dBA

*TEST METHODOLOGY: Noise levels declared for all products are measured in a semi-reverberant laboratory settings with dryer mounted at the manufacturer's recommended height. Visit bobrick.com for additional test results.

Explore Bobrick's extensive range of Hand Dryers at bobrick.com.

B-164, B-167 & B-169 SERIES LED MIRRORS

REFLECT QUALITY, VALUE & STYLE

Bobrick's LED Mirror Collection combines high quality LEDs with commercial grade mirror construction to provide a product that reflects quality, value and style.

Features & Benefits

- 50,000 hours of estimated life
- Improved illumination and reduced shadowing with integrated dimming option
- Lead-free silver backing exceeds ISO 9227:2012, 120 hour corrosion testing
- Mirror and backside mounting frame are IP44 rated for damp applications
- Safety PVC membrane on back prevents small pieces from falling off in the event of a mirror breakage
- Includes hardware required for mounting
- Environmentally suitable and energy efficient

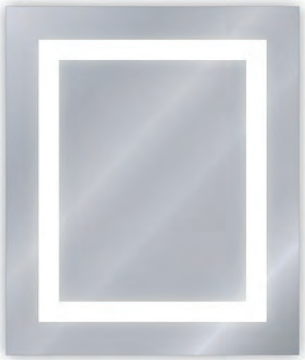

B-168 Backlit (Inner Etched) Series Popular Mirror Sizes

Mirrors can be installed vertically or horizontally

Model No.	Width	Height	Lumens
B-168 2739	27″	39″	2,500

B-164 Backlit Series Standard Mirror Sizes

Model No.	Width	Height	Lumens
B-164 1830	18″	30″	2,100
B-164 2436	24″	36″	2,640
B-164 2442	24″	42″	2,900
B-164 2739	27″	39″	2,900

B-169 Sidelit Series Standard Mirror Sizes

Model No.	Width	Height	Lumens
B-169 2436	24″	36″	1,155
B-169 3040	30″	40″	1,340

B-167 Backlit (Outer Etched) Series Popular Mirror Sizes

Mirrors can be installed vertically or horizontally

Model No.	Width	Height	Lumens
B-167 2436	23 5/8″	35 3/8″	2,760
B-167 2448	23 5/8″	47 2/8″	3,310
B-167 6642	64 15/16″	41 3/8″	4,965

B-290 Series Welded-Frame Mirrors

One-piece, roll-formed ¾″ x ¾″ angle-frame. Type-304 stainless steel angle with satin finish. Corners heliarc welded, ground and polished smooth. Beveled frame edge at mirror. No. 1 quality, ¼″ glass mirror; warranted against silver spoilage for 15 years. Galvanized steel back. Secured to concealed wall hanger with theft-resistant mounting.

Model No.	Width	Height
B-290 1830	18″	30″
B-290 1836	18″	36″
B-290 2430	24″	30″
B-290 2436	24″	36″
B-290 2448	24″	48″
B-290 2460	24″	60″
B-290 2472	24″	72″

Special Order Custom Sizes: Maximum size of one-piece mirror: 144″ W x 72″ H or 52″ W x 144″ H. For mirrors larger than maximum sizes specified, contact Quoting & Market Analysis department for feasibility and pricing. To specify special sizes, use Series Number followed by width and height.

B-165 Series Channel-Frame Mirrors

One-piece, ½″ x ½″ x ⅜″ channel-frame. Type-430 stainless steel with bright-polished finish. Mitered corners. No. 1 quality, ¼″ glass mirror; warranted against silver spoilage for 15 years. Galvanized steel back. Secured to concealed wall hanger with theft-resistant mounting.

Model No.	Width	Height
B-165 1824	18″	24″
B-165 1830	18″	30″
B-165 1836	18″	36″
B-165 2430	24″	30″
B-165 2436	24″	36″
B-165 2448	24″	48″
B-165 2460	24″	60″
B-165 4836	48″	36″

Special Order Custom Sizes: Maximum size mirror: 96″ x 72″ or 72″ x 96″. For mirrors larger than maximum sizes specified, contact Quoting & Market Analysis department for feasibility and pricing. To specify special sizes, use Series Number followed by width and height.

Explore Bobrick's extensive range of Mirrors at bobrick.com.

B-292 Series Welded-Frame Mirror/Shelf Combination

Same mirror as B-290 Series. Type-304 satin-finish stainless steel shelf. Shelf projects an additional 5″ from the mirror, with a ¾″ return on front and sides; front return edge hemmed for rigidity and safety. Shelf corners heliarc welded, ground and polished smooth.

Model No.	Width	Height
B-292 1836	18″	36″

Special-Order Custom Sizes: Maximum frame size available: 96″ x 72″ or 72″ x 96″ with one piece of glass. Maximum size of shelf: 96″ furnished as one piece. To specify special sizes, use Series Number followed by width and height.

B-1556 Series Frameless Mirrors

Bright-polished #8 finish, Type-304 stainless steel. Mirror has ¼″ return concealing ¼″ tempered masonite backing. Furnished with four mounting screws.

Model No.	Width	Height
B-1556 1824	17 1/2″	23 1/2″
B-1556 1830	17 1/2″	29 1/2″
B-1556 2436	23 1/2″	35 1/2″

B-166 Series Channel-Frame Mirror/Shelf Combination

Same mirror as B-165 Series. Type-304 satin-finish stainless steel shelf. Shelf projects 4″ with ⅜″ return on front and sides; front return edge hemmed for rigidity and safety.

Model No.	Width	Height
B-166 1824	18″	24″
B-166 1830	18″	30″
B-166 1836	18″	36″
B-166 2436	24″	36″

Special-Order Custom Sizes: Maximum size mirror: 60″ x 48″ or 48″ x 60″. Maximum shelf length: 60″. To specify special sizes, use Series Number followed by width and height.

B-942 Frameless Mirror (Front Secured)

Mirror is 11 ¼″ x 17 ¼″ overall, ¼″ deep. 18-gauge, Type-430 stainless steel with bright-polished finish.

B-293 Series Fixed-Position Tilt Mirrors

Provides visibility for wheelchair users. Frame is Type-304 satin-finish stainless steel. Beveled edges of frame hug mirror, providing gapless fit. No. 1 quality, ¼″ glass mirror; warranted against silver spoilage for 15 years. Mirror projects 4″ from wall at top and tapers to 1″ at bottom. Patented.

Model No.	Width	Height
⚡ B-293 1830	18″	30″
B-293 1836	18″	36″
⚡ B-293 2436	24″	36″

Special Order Custom Sizes: Maximum size mirror: 48″ x 36″ or 40″ x 40″. To specify special sizes, use Series Number followed by width and height.

B-294 Series Angle-Frame Two-Position Tilt Mirror

Tilt forward to provide full visibility for wheelchair users or return to upright position. Frame is ¾″ x ¾″, Type-304 satin-finish stainless steel angle. Beveled edges of frame hug mirror, providing gapless fit. No. 1 quality, ¼″ glass mirror; warranted against silver spoilage for 15 years. Top of mirror tilts 7″ from wall with self-locking mechanisms; bottom of mirror mounts to wall with full-length stainless steel hinge.

Model No.	Width	Height
B-294 1830	18″	30″

Special Order Custom Sizes: Maximum size mirror: 24″ x 36″ or 36″ x 24″. To specify special sizes, use Series Number followed by width and height.

DESIGNER'S NOTE

Framed mirrors are manufactured to overall dimensions, as shown in all tables. Framed mirrors must be installed with width and height dimensions as ordered. Mirror back and wall hanger cannot be installed sideways to reverse width and height dimensions. Provide minimum 3/4″ clearance at top of mirror for mounting on wall hanger and 1″ clearance on each side.

⚡ QuickShip Canada only.

Special-Order Reflective Surfaces

Polished stainless steel, tempered and laminated glass mirrors resist breakage and provide safety from broken glass, but differ in color and reflective quality from standard glass mirrors. Modest distortion is normal and not a returnable condition. Available on special order.

POLISHED STAINLESS STEEL
B-1656 Series Mirrors (up to 60″ x 36″ or 36″ x 60″)
B-2906 Series Mirrors (up to 60″ x 36″ or 36″ x 60″)

TEMPERED GLASS
B-1658 Series Mirrors (up to 96″ x 48″ or 48″ x 96″)
B-2908 Series Mirrors (up to 115″ x 48″ or 48″ x 115″)

LAMINATED GLASS
B-1659 Series Mirrors (up to 84″ x 48″ or 48″ x 84″)
B-2909 Series Mirrors (up to 84″ x 48″ or 48″ x 84″)

TOILET COMPARTMENT **ACCESSORIES**

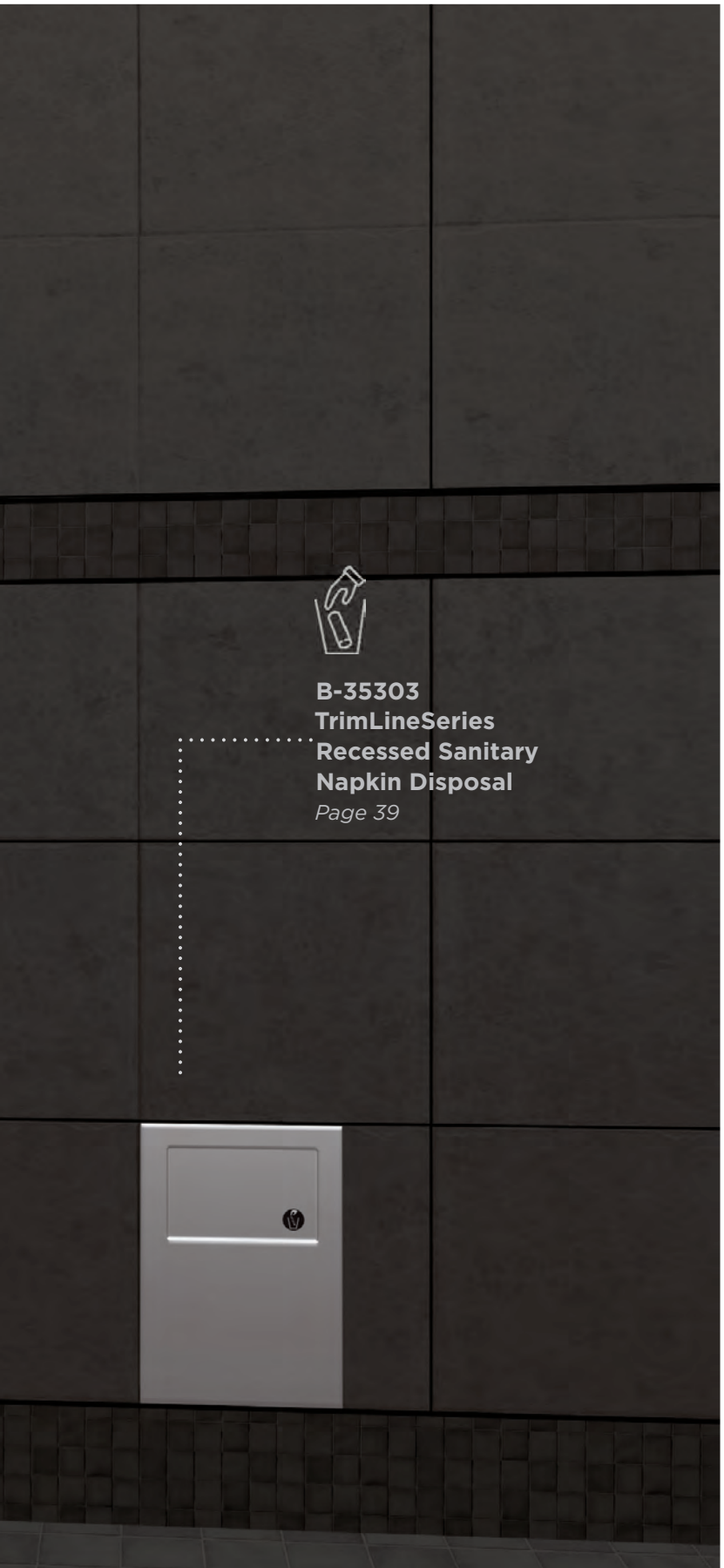

B-35303 TrimLineSeries Recessed Sanitary Napkin Disposal

Page 39

Products: B-542 Hook, B-544 Toilet Brush Holder, B-541 Spare Roll Holder, B-546 Toilet Tissue Dispenser, B-3013 Sanitary Waste Receptacle, B-3541 Sanitary Waste Bag Dispenser

Commercial Office
Products: B-3092 Toilet Cubicle Accessory, B-5806 Grab Bar

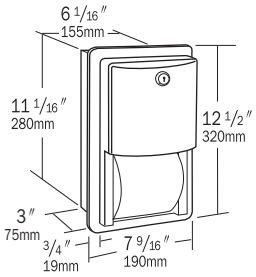

B-4388 ConturaSeries Recessed Multi-Roll Recessed Toilet Tissue Dispenser

Satin-finish stainless steel unit and dispensing mechanism. Flush tumbler lock. Holds two rolls up to 5 ¼″ diameter (1800 sheets). Extra roll drops when bottom roll is depleted. Theft-resistant, heavy-duty spindles.

B-4288 ConturaSeries Surface-Mounted Multi-Roll Toilet Tissue Dispenser

Satin-finish stainless steel unit and dispensing mechanism. Flush tumbler lock. Holds two rolls up to 5 ¼″ diameter (1800 sheets). Extra roll drops when bottom roll is depleted. Theft-resistant, heavy-duty spindles. Unit 6 1⁄16″ W, 11″ H, 5 15⁄16″ D.

B-3588 TrimLineSeries Surface-Mounted Multi-Roll Toilet Tissue Dispenser

Satin-finish stainless steel unit and dispensing mechanism. Flush lock. Theft resistant. Holds two rolls up to 5 ⅛″ diameter (1500 sheets). Removable skirt for optional recessed mounting. Unit 13 11⁄16″ W, 8 ½″ H, 4 ⅝″ D.

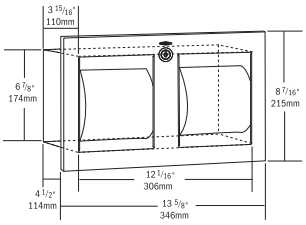

B-35883 TrimLineSeries Recessed Multi-Roll Toilet Tissue Dispenser

Satin-finish stainless steel unit and dispensing mechanism. Flush lock. Unit is theft resistant and equipped with a tumbler lock. Holds two rolls up to 5 ⅛″ diameter (1500 sheets).

B-2888 ClassicSeries Surface-Mounted Multi-Roll Toilet Tissue Dispenser

Satin-finish stainless steel unit and dispensing mechanism. Tumbler lock. Holds two rolls up to 5 ¼″ diameter (1800 sheets). Extra roll drops when bottom roll is depleted. Theft-resistant, heavy-duty spindles. Unit 6 1⁄16″ W, 11″ H, 5 15⁄16″ D.

B-3888 Similar to B-2888, but for recessed installation.

B-2840 Surface-Mounted Toilet Tissue Dispenser with Utility Shelf

Satin-finish stainless steel. Shelf has ½″ returns, hemmed front edge. Chrome-plated plastic spindles hold rolls up to 5 ½″ diameter (1800 sheets). Unit 16″ W, 4″ H, 5″ D. Theft-Resistant Spindle (Part No. 283-604) available as an option.

B-2890 Single Jumbo-Roll Surface Mounted Toilet Tissue Dispenser

Satin-finish Type-304 stainless steel. Equipped with tumbler lock. Spindle holds one 10″ diameter roll with 1 ⅝″ diameter core. Convertible for 2 11⁄16″ and 1 ⅝″ diameter core rolls. Powder-coated mounting plate. Slot reveals tissue supply. Unit 10 ⅝″ W, 10 ⅝″ H, 4 ½″ D.

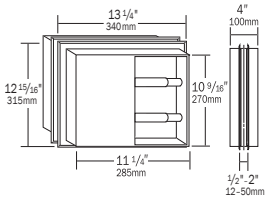

B-386 Partition-Mounted Multi-Roll Toilet Tissue Dispenser (Serves 2 Compartments)

Satin-finish stainless steel. Mounts centered through toilet partitions, ½″– 2″ thick; used from both sides. Holds four standard core toilet tissue rolls up to 5 ¼″ diameter; two for each side. Theft-Resistant Spindle (Part No. 283-604) available as an option.

B-685 Surface-Mounted Toilet Tissue Dispenser for Single Roll

Bright-polished stainless steel. Support-arm flanges lock to concealed stainless steel wall plates. Chrome-plated plastic spindle holds rolls up to 5 ½″ diameter (1800 sheets). Unit 7 ¼″ W, 2″ H; projects 3 15⁄16″ from wall.

B-2892 Surface-Mounted Twin Jumbo-Roll Toilet Tissue Dispenser

Satin-finish stainless steel unit with tumbler lock. Holds two 10″ diameter rolls with 2 ¼″ diameter core; convertible for 3″ diameter core rolls. Sliding panel exposes one roll at a time, allows easy roll changeover. Wide viewing slot in door. Quick reloading. Unit 20 13⁄16″ W, 11 ⅜″ H, 5 5⁄16″ D.

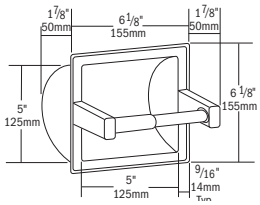

B-667 Recessed Toilet Tissue Dispenser

Bright-polished stainless steel. Chrome-plated plastic spindle holds roll up to 5 ⅛″ diameter (1500 sheets).

B-265 Surface-Mounted Vandal-Resistant Toilet Tissue Dispenser

Bright-polished chrome-plated steel. Self-locking mechanism. Controlled delivery. Accommodates two standard-core toilet tissue rolls up to 4-1/2″ diameter. Rolls cannot be removed from dispenser until empty. Unit 12-1/4″ W, 2-3/4″ H, projects 4-1/4″ from wall.

Explore Bobrick's extensive range of Toilet Tissue Dispensers at bobrick.com.

CUBICLE COLLECTION

ADD COORDINATED ELEGANCE TO ANY CUBICLE

Convenience & Style for Cubicle Interiors

Featuring contemporary styling, all Cubicle Collection models share common elements such as satin-finish stainless steel threaded escutcheons and post diameters.

B-540
Surface-Mounted Toilet Tissue Dispenser & Utility Shelf

B-541
Spare Toilet Roll Holder

B-542
Coat Hook

B-543
Surface-Mounted Toilet Tissue Dispenser for Single Roll

B-544
Toilet Brush Holder

B-546
Toilet Tissue Dispenser with Hood

B-547
Double Toilet Tissue Dispenser

B-548
Double Toilet Tissue Dispenser with Hoods

B-549
Double Coat Hook

Explore Bobrick's extensive range of Cubicle Collection Accessories at bobrick.com.

B-4221 ConturaSeries Surface-Mounted Seat Cover Dispenser

Satin-finish stainless steel. Dispenses 250 single- or half-fold toilet seat covers. Allow 5″ minimum clearance from bottom of dispenser to top of any horizontal projection for filling dispenser from bottom of unit. Unit 15 ¾″ W, 11 ¼″ H, 2 ⁄16″ D.

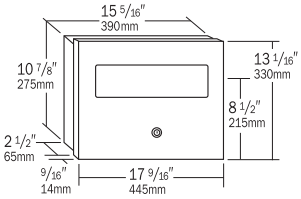

B-3013 TrimLineSeries Recessed Seat Cover Dispenser

Satin-finish stainless steel. Flush lock. Door has 90° return, conceals flange. Dispenses 500 toilet seat covers. Tumbler lock for theft-resistance.

B-221 ClassicSeries Surface-Mounted Seat Cover Dispenser

Satin-finish stainless steel. Dispenses 250 single- or half-fold toilet seat covers. Allow 5″ minimum clearance from bottom of dispenser to top of any horizontal projection for filling dispenser from bottom of unit. Unit 15 ¾″ W, 11″ H, 2″ D.

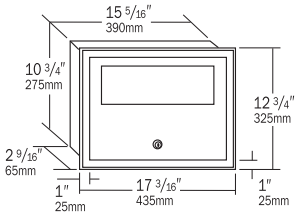

B-301 ClassicSeries Recessed Seat Cover Dispenser

Satin-finish stainless steel. Seamless beveled flange. Dispenses 500 toilet seat covers. Tumbler lock for theft-resistance.

Explore Bobrick's extensive range of Seat Cover Dispensers at bobrick.com.

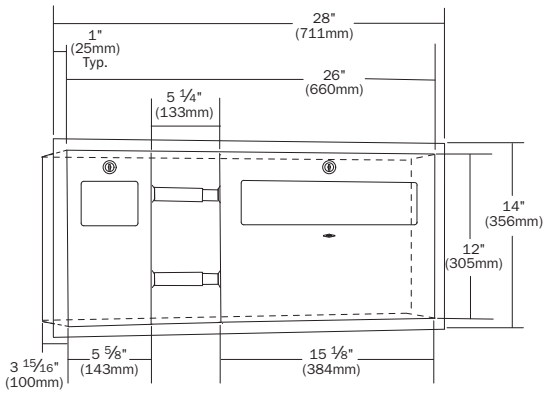

B-3091 ClassicSeries Recessed Toilet Tissue, Seat Cover Dispenser and Waste Disposal

Satin-finish stainless steel. Mounts flush against side wall in accessible toilet compartment to allow clearance for grab bar above unit with toilet tissue dispenser on left side. Holds 500 toilet seat covers and two rolls of tissue. Capacity: 0.5-gal. Patented.

B-30919 Similar to B-3091, but with stainless steel skirt for surface-mounting. Patented.

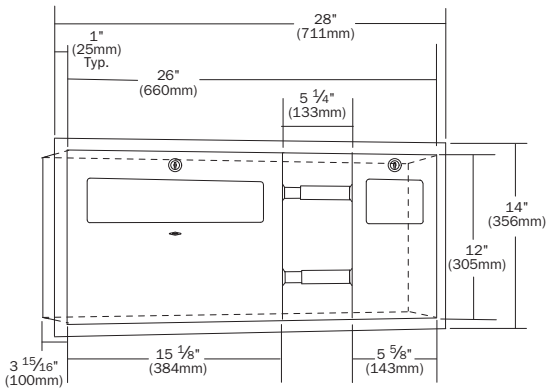

B-3092 ClassicSeries Recessed Toilet Tissue, Seat Cover Dispenser and Waste Disposal

Satin-finish stainless steel. Mounts flush against side wall in accessible toilet compartment to allow clearance for grab bar above unit with toilet tissue dispenser on right side. Holds 500 toilet seat covers and two rolls of tissue. Capacity: 0.5-gal. Patented.

B-30929 Similar to B-3092, but with stainless steel skirt for surface-mounting. Patented.

DESIGNER'S NOTE

These new recessed combination units are designed to be installed 1 ½″ minimum below a horizontal side grab bar in Wheelchair Accessible and Ambulatory Accessible Toilet Compartments. The units do not reduce the required 1 ½″ grab bar wall spacing. This complies with 2010 ADA as well as 2009 and 2017 ICC A117.1 standards. Additionally, providing a disposal on the side wall adjacent to the toilet tissue dispenser and in front of the rear wall of compartment/room complies with 2019 California Building Code, Section 11B-604.7.

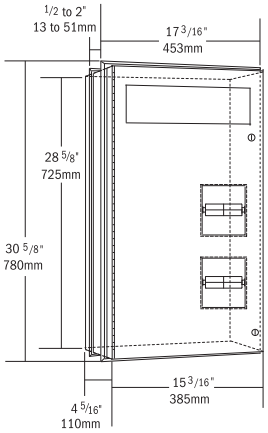

B-347 ClassicSeries Partition-Mounted Seat Cover Dispenser and Toilet Tissue Dispenser

Mounts centered through toilet partition. Used from both sides, serviced from one side. Holds 250 toilet seat covers and two rolls of tissue for each compartment. Theft-resistant spindles.

B-3474 Similar to B-347, but for recessed installation in side wall of single compartment. Unit mounts on left side of toilet (when seated) with tissue dispensers on right side. Holds 250 toilet seat covers and two rolls of tissue.

B-34745 Similar to B-3474. Unit mounts on right side of toilet (when seated) with tissue dispensers on the left side.

B-3479 Similar to B-3474, but with stainless steel skirt for surface-mounting.

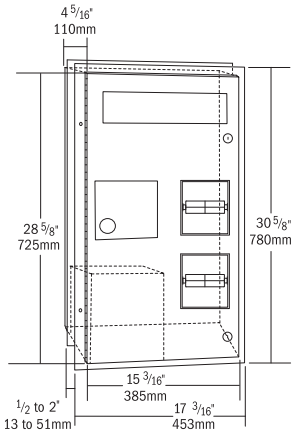

B-357 ClassicSeries Partition-Mounted Seat Cover Dispenser, Sanitary Napkin Disposal and Toilet Tissue Dispenser

Mounts centered through toilet partition. Used from both sides, serviced from one side. Capacity: 0.8-gal. Holds 250 toilet seat covers and two rolls of tissue for each compartment. Theft-resistant spindles.

B-3574 Similar to B-357, but for recessed installation in side wall of single compartment. Unit mounts on left side of toilet (when seated) with tissue dispensers on right side.

B-35745 Similar to B-357, but recessed installation in side wall of single compartment. Unit mounts on right side of toilet (when seated) with tissue dispensers on the left side.

B-3579 Similar to B-357, but with stainless steel skirt for surface mounting. Unit mounts on left side of toilet (when seated) with tissue dispenser on the right side.

DESIGNER'S NOTE

Partition-mounted models B-347, B-3471, B-34715, B-357, B-3571 and B-35715 mount through partitions 1/2" to 2" thick, serving two compartments. Toilet tissue dispensers hold 5 ¼" diameter, 1800-sheet rolls. Theft-resistant spindles included. In an Accessible Toilet Compartment, the unit's location in the adjoining toilet compartment must permit the unit's complete operation, allowing its door to swing clear of toilet when servicing.

B-270 ConturaSeries Surface-Mounted Sanitary Napkin Disposal

Satin-finish stainless steel. Cover is drawn, one-piece construction; secured to cabinet with full-length stainless steel piano-hinge. Capacity: 1-gal. Unit 7 ½″ W, 10″ H, 3 13⁄16″ D.

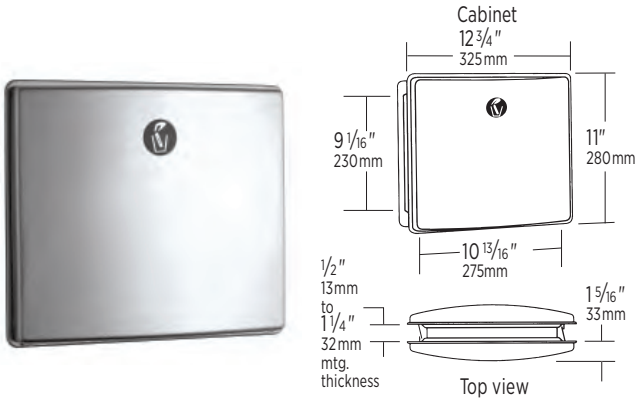

B-4354 ConturaSeries Partition-Mounted Sanitary Napkin Disposal

Satin-finish stainless steel. Mounts in toilet partition ½ – 1 ¼″ thick. Self-closing doors pull down with less than 5 lbs of force for access to disposal. Removable, leak-proof, 0.7-gal plastic receptacle.

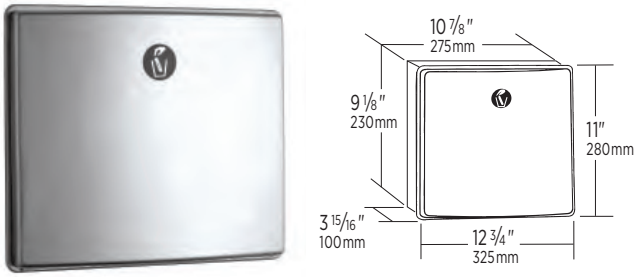

B-4353 ConturaSeries Recessed Sanitary Napkin Disposal

Satin-finish stainless steel. Self-closing door pulls down for access to disposal. Furnished with removable, leak-proof, 1.2-gal plastic receptacle.

B-35139 TrimLineSeries Surface-Mounted Sanitary Napkin Disposal

Satin-finish stainless steel. Door secures to cabinet with a magnet catch and cable door-swing limiter. Removable, 0.6-gal waste receptacle. Skirt is removable in the field for optional recessed mounting. Unit 8 1⁄16″ W, 14 1⁄8″ H, 4 ½″ D.

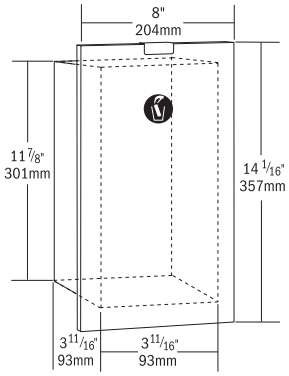

B-3513 TrimLineSeries Recessed Sanitary Napkin Disposal

Satin-finish stainless steel. Door secures to cabinet with a magnet catch and cable door-swing limiter. Removable, 0.6-gal waste receptacle.

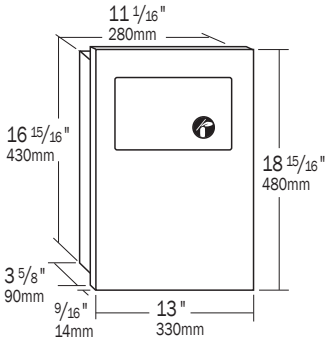

B-35303 TrimLineSeries Recessed Sanitary Napkin Disposal

Satin-finish stainless steel. Door has 90° return, conceals flange. Self-closing panel covers disposal opening. Removable, leak-proof, 1.2-gal plastic receptacle.

B-254 ClassicSeries Surface-Mounted Sanitary Napkin Disposal

Satin-finish stainless steel. Door has tumbler lock. Self-closing panel covers disposal opening. Removable, leak-proof, 1.2-gal plastic receptacle. Unit 10 11⁄16″ W, 15 ⅛″ H, 4 1⁄16″ D.

B-354 ClassicSeries Partition-Mounted Sanitary Napkin Disposal

Satin-finish stainless steel. Mounts in partitions ½ – 1 ¼″ thick. Self-closing panels cover openings. Removable, leak-proof, 1.2-gal plastic receptacle.

Explore Bobrick's extensive range of Sanitary Napkin Disposals at bobrick.com.

B-5806 Series & B-6806 Series

Straight Grab Bars

Constructed of 18-gauge, Type-304 satin-finish stainless steel with slip-resistant surface. Cover snaps over mounting flange to conceal screws. For a complete list of standard grab bar sizes, visit bobrick.com

Standard Length	1 1/4″ Diameter	1 1/2″ Diameter
12″	N/A	B-6806 x 12
18″	B-5806 x 18	B-6806 x 18
24″	B-5806 x 24	B-6806 x 24
30″	B-5806 x 30	B-6806 x 30
36″	B-5806 x 36	B-6806 x 36
42″	B-5806 x 42	B-6806 x 42
48″	B-5806 x 48	B-6806 x 48

B-4998 1 ¼″ Diameter Swing Up Grab Bar

29″ L, 1 ¼″ diameter.

B-4998.99 Satin-finish slip-resistant surface.

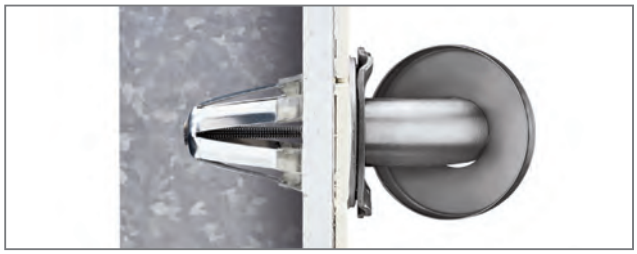

251-4 WingIt™ Grab Bar Fastener

For 2 ½″ and 3 ½″ or deeper hollow walls with finished wall surfaces ¼″ to 1 ½″ thick. One fastener required for each flange. Corrosion-resistant stainless steel. Install grab bars without backing. The fastener will support 300 lbs load.

WingIt™ is a trademark of WingIt Innovations, LLC.

DESIGNER'S NOTE

New research shows that satin-finish grab bar surfaces can provide 10% more traction than peened-finish grab bars when grabbed with wet hands. While previously, the National Building Code of Canada (NBC) required "peened" or "knurled finishes" in "wet" areas in healthcare facilities, the code has been revised to require "slip-resistant" finishes in such applications. For peened finish on any Bobrick grab bar, add .99 to the model number (e.g., B-5806.99 x 18).

B-5898 & B-6898

90-Degree Grab Bars

30″ W x 30″ H. 18-gauge, Type-304 satin-finish stainless steel.

Model No.	Diameter	Finish
B-5898	1 1/4″	Slip-Resistant
B-6898.99	1 1/2″	Peened

B-58616 & B-68616 Two-Wall Tub/Shower Compartment Grab Bars

24″ W x 36″ D. 18-gauge, Type-304 stainless steel with satin-finish, slip-resistant surface.

Model No.	Diameter
B-58616	1 1/4”
B-68616	1 1/2″

Safety Warnings

Grab bars are no stronger than the anchors and walls to which they are attached and, therefore, must be firmly secured to support intended loads. To avoid potential injury, the building owner or maintenance personnel should remove the grab bar if it is not adequately secured to wall or if there is any observed damage to welds.

DESIGNER’S NOTE

Bobrick offers a range of educational resources related to ADA compliance, from videos to our Planning Guide for Accessible Restrooms and Continuing Education course. **Visit the ADA Compliance Education section of bobrick.com for more information.**

Explore Bobrick’s extensive range of Grab Bars at bobrick.com.

SPECIALTY **ACCESSORIES**

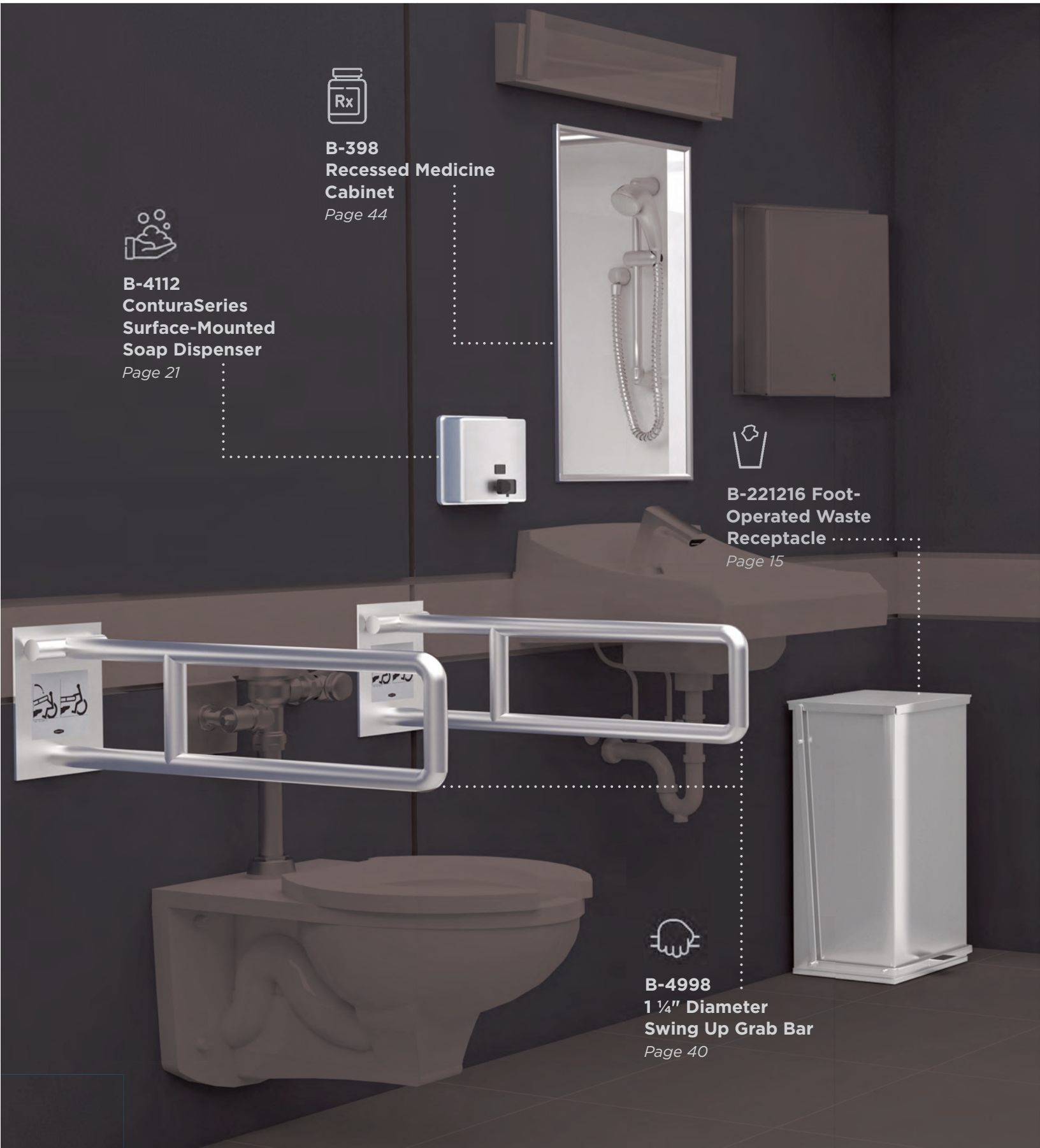

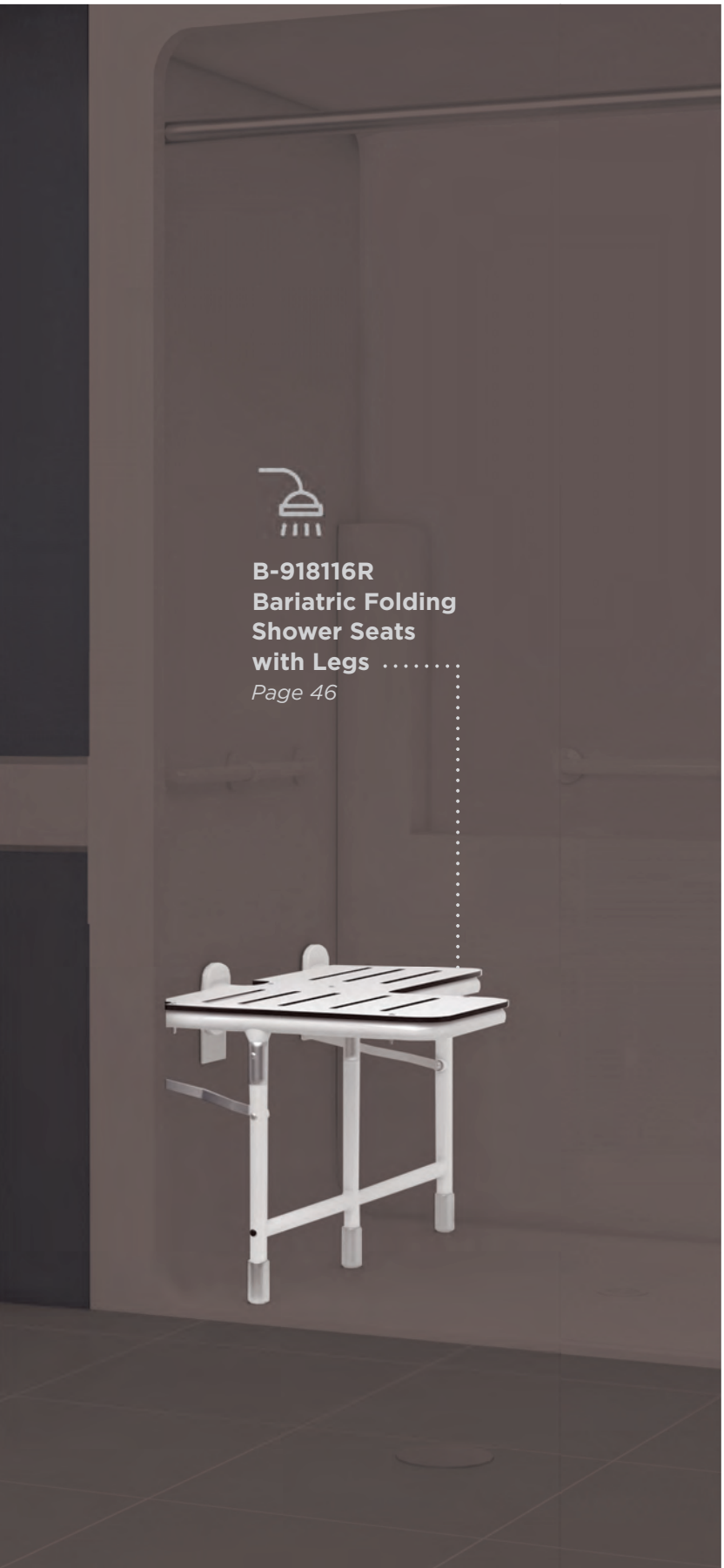

B-918116R Bariatric Folding Shower Seats with Legs

Page 46

Assisted Living Room
Products: B-398 Medicine Cabinet, B-49916 Grab Bar, B-5116 Hook, B-580616 Grab Bar

Medical Office
Products: B-221216 Trash Can, B-26212 Paper Towel Dispenser, B-165 Mirror, B-2111 Soap Dispenser, B-7816 Charting

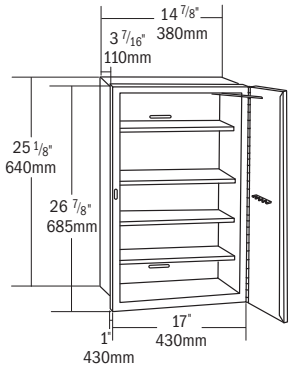

B-398 Recessed Medicine Cabinet

Type-304 satin-finish stainless steel. Mirror: No. 1 quality, ¼″ glass electrolytically copper-plated. 15-year warranted against silver spoilage. Door has full-length stainless steel piano-hinge, magnetic catch and cable doorstop. Four adjustable stainless steel shelves. Cabinet may be inverted for right- or left-hand door swing.

B-297 Surface-Mounted Medicine Cabinet

All-steel cabinet and two fixed shelves with baked white enamel finish. Mirror: No. 1 quality, ⅛″ glass electrolytically copper-plated. 15-year warranted against silver spoilage. Door has enameled steel piano-hinge and magnetic catch. Door is 14 ⅛″ W, 20 ¼″ H. Unit 3 ¾″ D.

B-8397 Surface-Mounted Tissue Dispenser

Dispenses one pack of 100 two-ply facial tissues. Cabinet Type-304 satin-finish stainless steel. Equipped with concealed locking device; opens with key provided. Concealed wall plate is 22-gauge, Type-304 stainless steel. Unit 10 ¼″ W, 5 3⁄16″ H, 2 ¼″ D.

B-676 Surface-Mounted Towel Shelf/Towel Bar

Bright-polished stainless steel. Shelf 6 ¼″ wide, four 5⁄16″ square tubes. 5⁄16″ square towel bar below shelf. 24″ length. Projects 8 ½″ from wall.

B-683 Surface-Mounted Toiletry Shelf

Bright-polished stainless steel. 24″ length. Shelf 4 ¾″ wide, projects 5 ¾″ from wall. Edges are roll-formed for safety.

B-674 Surface-Mounted Towel Bar

Bright-polished stainless steel. Round ¾″ diameter towel bar. Available in 18″ and 24″ lengths. Projects 3 ¼″ from wall.

B-530 **Extra-Heavy-Duty Surface-Mounted Towel Bar**

Satin-finish stainless steel, 18-gauge, 1″ diameter bar with snap-flange mounting. Withstands 900 lbs downward pull when properly installed. Available in 18″ and 24″ lengths.

B-545 **Surface-Mounted Towel Bar**

Satin-finish stainless steel. Threaded escutcheon conceals mounting plate, provides snug fit to the wall. Available in 18″ and 24″ lengths. Projects 3 ¾″ from wall.

B-673 **Surface-Mounted Towel Bar**

Bright-polished stainless steel. ¾″ square towel bar. Available in 18″ and 24″ lengths. Projects 3 ¼″ from wall.

B-4207 **Curved Shower Rod**

1″ diameter rod is 20-gauge satin-finish stainless steel. Swivel brackets are chrome-plated zinc die cast construction with exposed surfaces in architectural satin finish. Maximum 55° swivel rotation. Available in 60″ or 72″ lengths.

B-687 **Surface-Mounted Door Bumper**

Bright-polished stainless steel. Flange is 2″ x 2″. Black nylon post with black neoprene bumper. Projects 2 ⅛″ from wall.

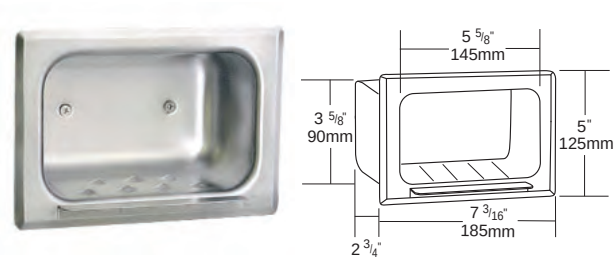

B-4380 **Recessed Heavy-Duty Soap Dish**

Type-304 stainless steel, matte polished finish. Mounting clamp for stud walls. Unit 7 3⁄16″ W, 5″ H.

Explore Bobrick's extensive range of Bathroom Accessories at bobrick.com.

B-207 Shower Curtain Rod with Concealed Mounting

1″ diameter rod is 20-gauge, Type-304 satin-finish stainless steel. 1 ⅜″ diameter flanges are chrome-plated plastic, bright-polished finish; mount on concealed wall brackets. Available in 36″, 48″, 60″, 72″ lengths.

204-2 Vinyl Shower Curtain

Opaque, matte white vinyl, 0.008″ thick, contains antibacterial and flame-retardant agents. Nickel-plated brass grommets along top, one every 6″. Bottom and sides are hemmed. Curtain 42″ W, 72″ H. Requires 7 hooks (not included).

204-1 Shower Curtain Hook Type-304 stainless steel for use on 1″ and 1 ¼″ diameter shower curtain rods.

NEW

B-51815 Reversible Seat with Swing Down Legs

ADA-compliant reversible wall-mounted phenolic, foot supported. Frame, wall flanges and legs are Type-304 stainless steel. Seat 33″ W, projects 22 7⁄16″ from wall. When properly installed supports up to maximum static load of 1000 lbs. Total weight on seat must not exceed 1000 lbs. Left-hand seat shown.

B-5191 Folding Shower/Dressing Area Seat

Complies with ADA Accessible Design Guidelines. Compact design. Seat is constructed of durable, water-resistant, ivory-colored, 5⁄16″ thick solid phenolic. Frame and mounting bracket are Type-304 stainless steel and feature self-locking mechanism. Seat 18″ W, projects 15 13⁄16″ from wall. When properly installed supports up to maximum static load of 500 lbs. Total weight on seat must not exceed 500 lbs.

B-517 Folding Shower Seat

Complies with ADA Accessible Design Guidelines. Foam-padded, white, water-resistant Naugahyde seat 1 ½″ thick, with enclosed ½″ plywood base. Seat 32 ⅞″ W, projects 22 11⁄16″ from wall. Left-hand seat shown. When properly installed supports up to maximum static load of 360 lbs. Total weight on seat must not exceed 360 lbs.

B-518 Similar to B-517, with right-hand seat.

B-918116L & B-918116R Series

Bariatric Folding Shower Seats with Legs

ADA-compliant wall-mounted phenolic, foot-supported. When properly installed supports up to maximum static load of 1102 lbs. Total weight on seat must not exceed 1102 lbs. Seat 31 ½″ W, projects 22 ⅝″ from wall. Frame and swing-down legs are 1 ¼″ zinc-plated vinyl-coated tubing.

Explore Bobrick's extensive range of Shower/Tub Accessories at bobrick.com.

B-635 KLUTCH MOBILE DEVICE HOLDER

KEEPS MOBILE DEVICES SAFE & SECURE

Convenience Throughout the Restroom

Bobrick's new B-635 Klutch is a modern, unique and practical solution for storing mobile devices anywhere in the restroom, including inside toilet partitions and cubicles. Patented.

Features & Benefits

- **Convenient Design:** Sleek, compact design "klutches" mobile devices for safety and fits with any décor.
- **Easy Installation:** Easily installed in toilet compartments, common spaces or private areas where storage is desired.
- **Versatile:** Integrated bag hook holds up to 300 lbs and can accommodate multiple items.
- **ADA Compliant:** Requires no grasping or twisting to use.

Grand Prize Winner
Product Innovations 2019
Presented by *BUILDINGS*

Winner
Product Innovation Awards 2019
Presented by *Architectural Products*

Klutch provides a safe place to store smartphones, tablets, laptops and more.

Also available in Matte Black

See it in Action!
Scan the QR code below to watch the product video.

B-6827 **Hat and Coat Hook**

Satin-finish stainless steel. Flange is 2″ x 2″. Hook 1″ W, 6 ½″ H; projects 3 1⁄16″ from wall. Concealed wall plate.

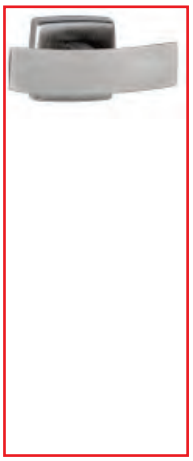

B-672 **Double Robe Hook**

Bright-polished stainless steel. Contoured 4″ wide bar forms hook at each end. Flange is 2″ x 2″. Projects 2 5⁄16″ from wall.

B-6727 Similar to B-672, with satin finish.

B-239 **Shelf with Mop/Broom Holders & Hook**

Shelf is 18-gauge, Type-304 satin-finish stainless steel; 34″ L, 13″ H, 8″ D. Three anti-slip mop holders have spring-loaded rubber cams that grip handles ⅞″ to 1 ¼″ diameter. Four stainless steel hooks.

B-224 **Shelf with Mop/Broom Holders & Rag Hooks**

Shelf is 18 gauge, Type-304 satin-finish stainless steel; 36″ L, 6″ H, 8″ D. Four anti-slip mop holders have spring-loaded rubber cams that grip handles ⅞″ to 1 ¼″ diameter. Holds mops 8″ from wall. Three stainless steel rag hooks. Rod for wet rags below shelf.

Explore Bobrick's extensive range of Hooks/Shelves/Custodial Accessories at bobrick.com.

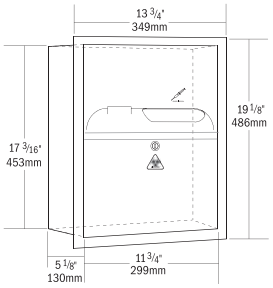

B-35016 Recessed Sharp Disposal

Satin-finish stainless steel. Door equipped with full-length stainless steel piano-hinge at bottom; swings down for easy replacement of sharps container. Holds BD brand Sharps Collector, 5.4 Qt, part number 305443.

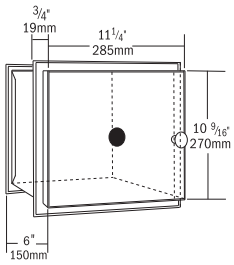

B-505 Recessed Specimen Pass-Through Cabinet

Satin-finish stainless steel. Provides convenient passage for specimen from patient area to laboratory. Self-closing doors. Interlocking mechanism prevents both doors from being open at the same time; provides sight barrier. Removable stainless steel tray.

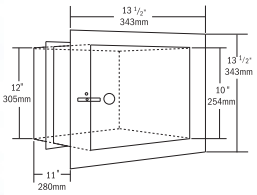

B-50517 Recessed Heavy Duty Specimen Pass-Through Cabinet

Satin-finish stainless steel. Provides convenient passage for specimen from patient area to laboratory. Self-closing doors. Interlocking mechanism prevents both doors from being open at the same time; provides sight barrier. Removable stainless steel tray.

B-7816 Charting Station/Shelf

Satin-finish stainless steel. Pull-down shelf/charting station 22″ W, 15″ D in extended position; 1 ⅜″ D in retracted position.

NEW

B-9881 Vertical Bay C-Fold Paper Holder

Type 304 stainless steel powder coated white. . Holds 400 (200 per bay) C-fold paper towels measuring 3-1/8″ to 3-5/8″ wide. Unit 8″ W x 2 ½″ D. Open bay design deters use as a ligature point.

NEW

B-9884 Adjustable Auto-Release Clothes Hook

Type 304 stainless steel powder coated white. Backplate is 14-gauge (2mm) with a side length of 5 1/8″ (130mm). Ligature Resistant Auto-Release Hooks have an adjustable releasing range of zero to twenty-five pounds.

Explore Bobrick's extensive range of Healthcare Accessories at bobrick.com.

KB310-SSRE

Horizontal Stainless Steel Recessed-Mounted Baby Changing Station

ADA compliant, deep-drawn, uniform grain stainless steel components. Molded gray color polypropylene changing surface. 41 5/16″ W x 26 7/32″ H. Depth (closed) 2 23/32″ Extension (open) 17 13/32″. Patented.

KB310-SSWM Similar to KB310-SSRE, but surface mounted. Patented.

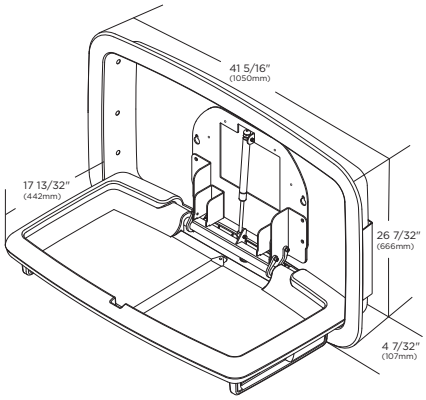

KB311-SSRE Vertical, Recessed-Mounted Baby Changing Station

ADA compliant, deep-drawn, uniform grain stainless steel components. Molded gray color polypropylene changing surface. 26 7/32″ W x 41 5/16″ H. Depth (closed) 2 23/32″ Extension (open) 32 27/32″ Patented.

KB311-SSWM Similar to KB311-SSRE, but surface mounted. Patented.

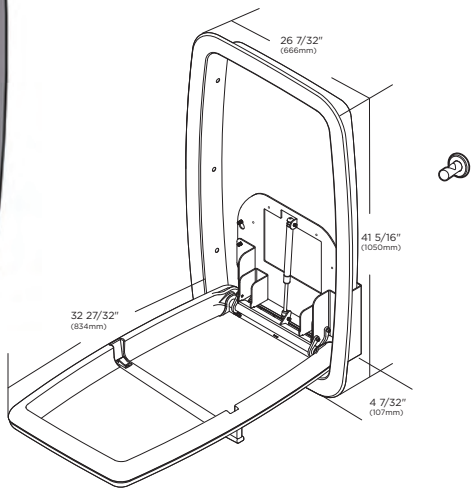

DESIGNER'S NOTE

According to third-party research, 73% of parents are more likely to visit businesses with baby changing stations. **For additional insights on generating loyalty through family friendly accommodation, visit koalabear.com/loyalty.**

KB300-00

Horizontal, Wall-Mounted Baby Changing Station

Beige color polypropylene cabinet and bed. Unit 35 15⁄16″ W, 20 3⁄4″ H. Depth (closed) 4″. Extension (open) 21 3⁄16″. Patented.

Available in Beige (00), Grey (01) and White Granite (05).

KB300-SS

Horizontal, Wall-Mounted Baby Changing Station with Stainless Steel Veneer

Polypropylene cabinet and bed with 22-gauge, Type-304 brushed stainless steel veneer. Unit 35 15⁄16″ W, 20 3⁄4″ H. Depth (closed) 4″. Extension (open) 21 3⁄16″. Patented.

Available in Grey (01) and White Granite (05).

KB301-00

Vertical, Wall-Mounted Baby Changing Station

Beige color polyethylene cabinet and bed. Unit 20 3⁄4″ W, 35 7⁄8″ H. Depth (closed) 4″. Extension (open) 36 5⁄8″ Patented.

Available in Beige (00), Grey (01) and White Granite (05)..

DESIGNER'S NOTES

All Baby Changing Station models equipped with built-in Sanitary Bed Liner Dispensers. Liners sold separately, part number KB150-99.

Microban® antibacterial product protection, a Koala Baby Changing Station exclusive, helps keep stations cleaner between cleanings.

Explore our extensive range of Koala Kare Childcare Accessories at koalabear.com.

WHY BOBRICK?

PORTFOLIO OF VALUES

BOBRICK

Architects, developers and facility managers have selected Bobrick's performance-engineered restroom accessories with confidence for over a century. As the market leader, we deliver building owner value through design excellence compliance, sustainability and economical cost-in-use.

DESIGN

Three design-integrated series of accessories include ConturaSeries® for prestige properties, TrimLineSeries™ for upscale buildings and ClassicSeries® for standard use and heavy-traffic projects. From Class-A to education and healthcare, recessed and surface-mounted, we have your design.

COMPLIANT

Our products are engineered to meet the latest accessibility requirements including wall protrusion, mounting heights, reach and operation. Bobrick also provides detailed consultation on compliant product selection and installation. Bobrick/Koala meets ADA-ABA, ICC/ANSI, ASTM, EN.

HYGIENIC

Bobrick is at the forefront of the touch-free commercial restroom with automatic models to limit cross contamination. Our stainless products are easy to maintain and sanitize through regular cleaning. Microban® Antimicrobial protection is a Koala® baby changing station exclusive.

SUSTAINABLE

Accessories fabricated of 50%-70% post-industrial stainless steel contribute toward LEED certification. Soap and towel dispensers are engineered to reduce consumables usage, eliminating the need for proprietary towels and soap cartridges, thereby reducing the operating footprint of a given building.

DURABLE

Robust engineering and built-in maintainability are the standards for Bobrick restroom accessories and Koala products, providing life-of-the-building functionality with appropriate maintenance. Reduced repair and replacement costs also deliver a positive impact on the operating budget.

ECONOMICAL

Cost-in-use savings are also trademarks of Bobrick restroom accessories. Products are designed to control soap and paper towel usage, reduce labor and maintenance expense, and to be vandal-resistant. Savings calculators, available online, confirm the substantial savings and return on investment.

FREEDOM

Non-proprietary dispensing of universal paper towels and bulk soap help building owners escape the high prices of consumables contracts common to closed system products. This facilitates open-market procurement and the ability to take advantage of a large variety of soap and towel options.

BUILDING VALUE SINCE 1906

Bobrick.com

U.S. Corporate Office	818.982.9600	customerservice@bobrick.com
Canadian Offices	877.423.6555 Eastern Canada 877.423.6444 Western Canada	customerservice@bobrick.com
International Customer Service	+1.818.764.1000	international@bobrick.com
UK & Europe	+44 (0)20 8366 1771	uksales@bobrick.com
GAMCO Commercial Restroom Accessories A Division of Bobrick	818.982.9600	customerservice@bobrick.com
Koala Kare Products A Division of Bobrick	888.733.3456	customerservice@koalabear.com
Thrislington Cubicles A Division of Bobrick	+44 (0)12 4452 0677	sales@thrislington-us.com

Illustrations and descriptions herein are applicable to production as of the date of this catalog. The manufacturer reserves the right to, and does from time to time, make changes and improvements in designs and dimensions.

For product warranty information, including warranty conditions and limitations for Bobrick Washroom Accessories, Koala Kare Products Baby Changing Stations and other products, please visit bobrick.com.

Bobrick, Koala Kare and MICROBAN and other brand names are registered with the United States Patent and Trademark Offices and as trademarks in several countries throughout the world. For patent information, please visit bobrick.com/patents.

Catalog No. DWA23, _M. February 2026 © 2026 Bobrick Washroom Equipment, Inc.